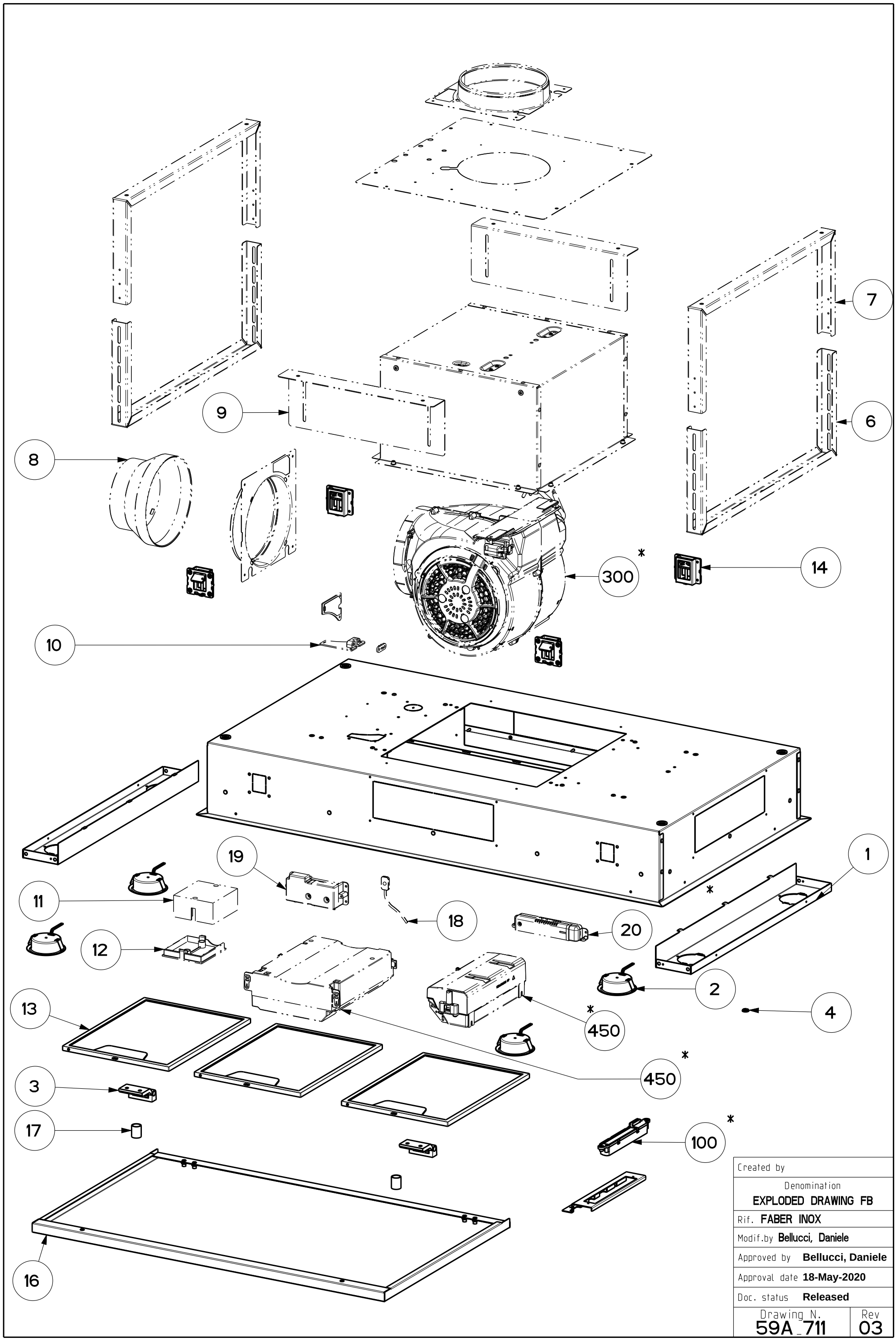

Created by	
Denomination EXPLODED DRAWING FB	
Rif. FABER INOX	
Modif.by Bellucci, Daniele	
Approved by Bellucci, Daniele	
Approval date 18-May-2020	
Doc. status Released	
Drawing N. 59A_711	Rev 03