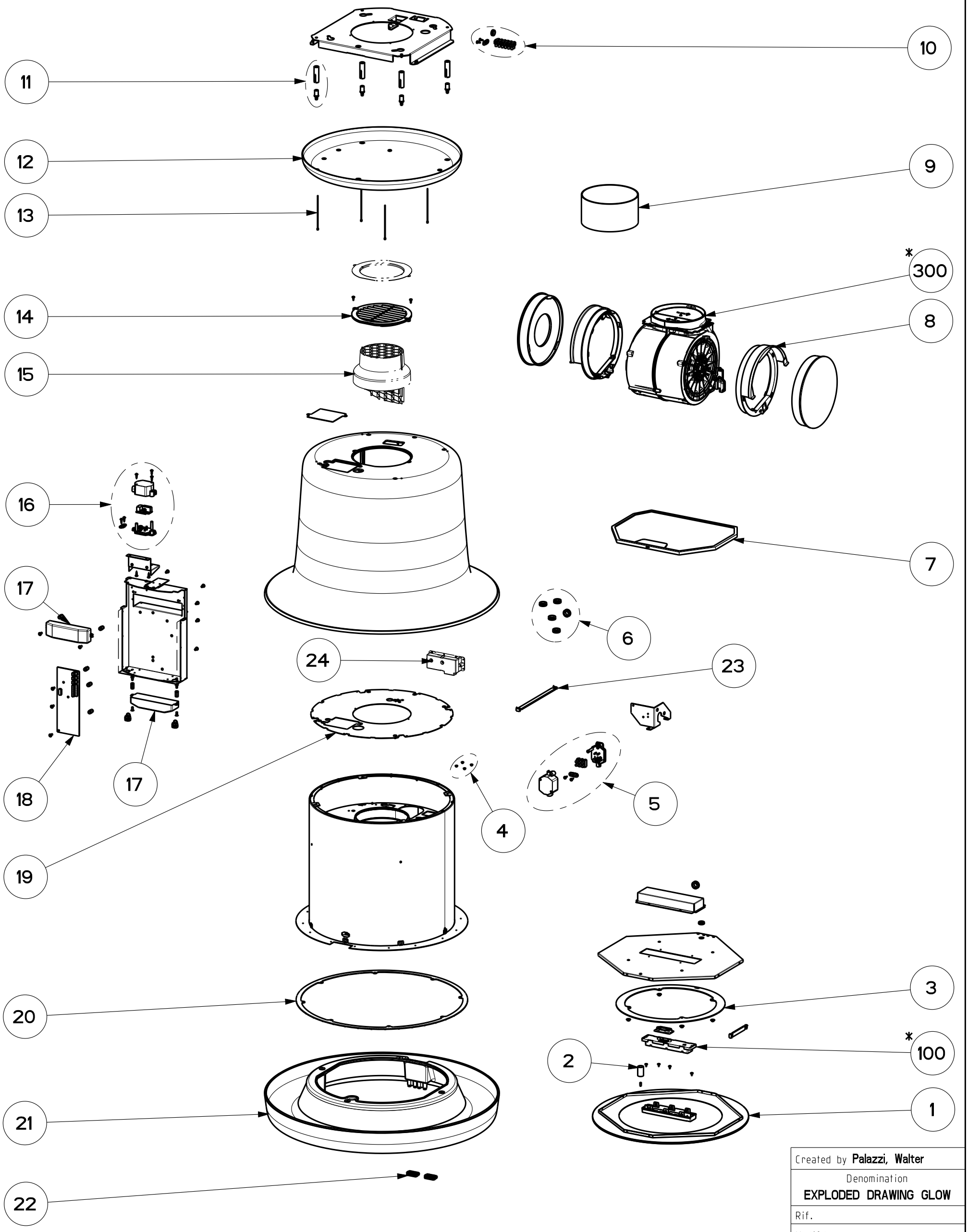

Created by	Palazzi, Walter
Denomination	EXPLODED DRAWING GLOW
Rif.	
Modif.by	
Approved by	Palazzi, Walter
Approval date	02-Oct-2020
Doc. status	Released
Drawing N. 345014_734	Rev 02