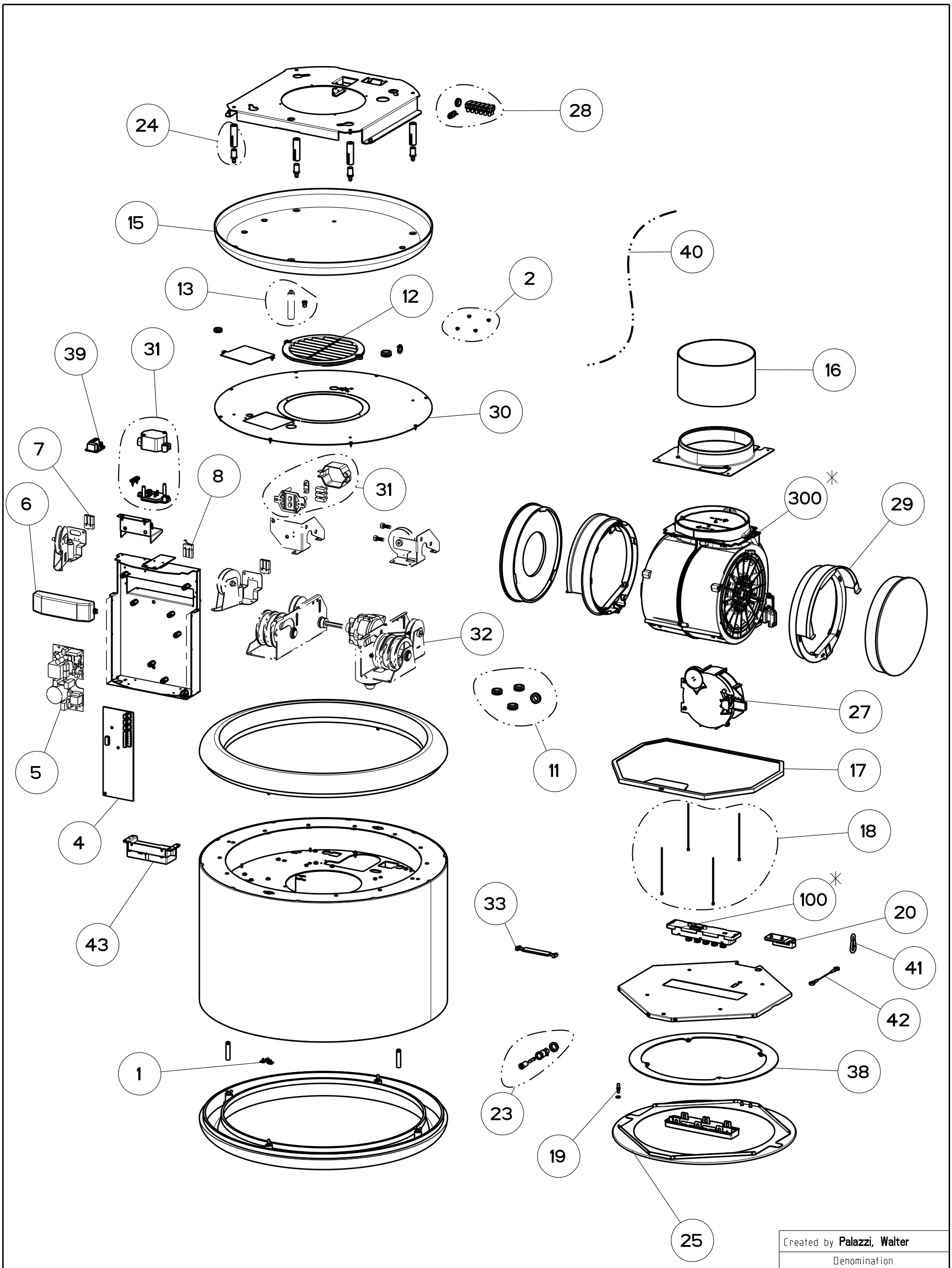

Created by **Palazzi, Walter**	
Denomination **EXPLODED DRAWING**	
Rif.	
Modif.by	
Approved by **Palazzi, Walter**	
Approval date **02-Oct-2020**	
Doc. status **Released**	
Drawing N. 345016_718	Rev 02