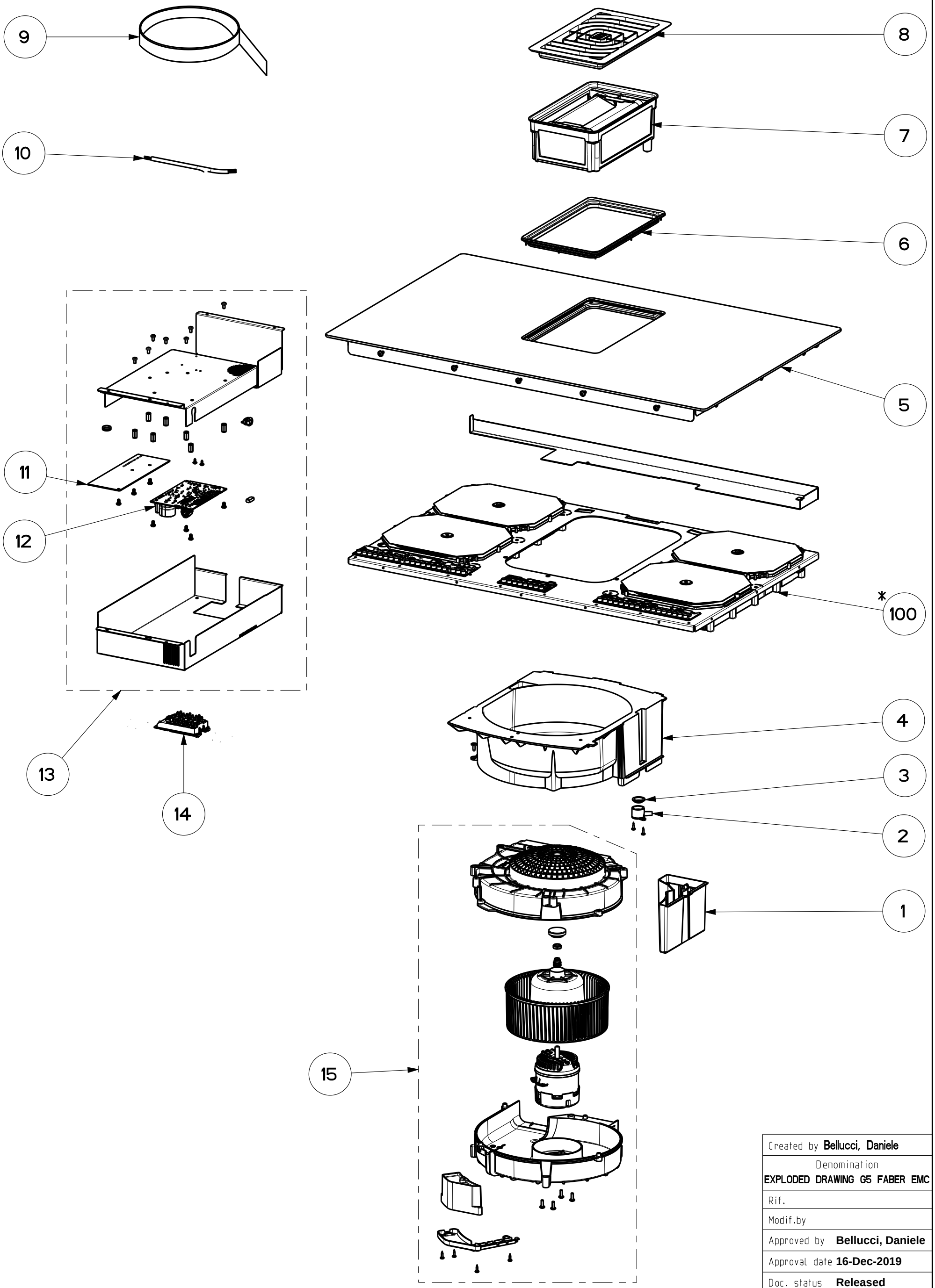

Created by **Bellucci, Daniele**	
Denomination **EXPLODED DRAWING G5 FABER EMC**	
Rif.	
Modif.by	
Approved by **Bellucci, Daniele**	
Approval date **16-Dec-2019**	
Doc. status **Released**	
Drawing N. 340006_844	Rev 01