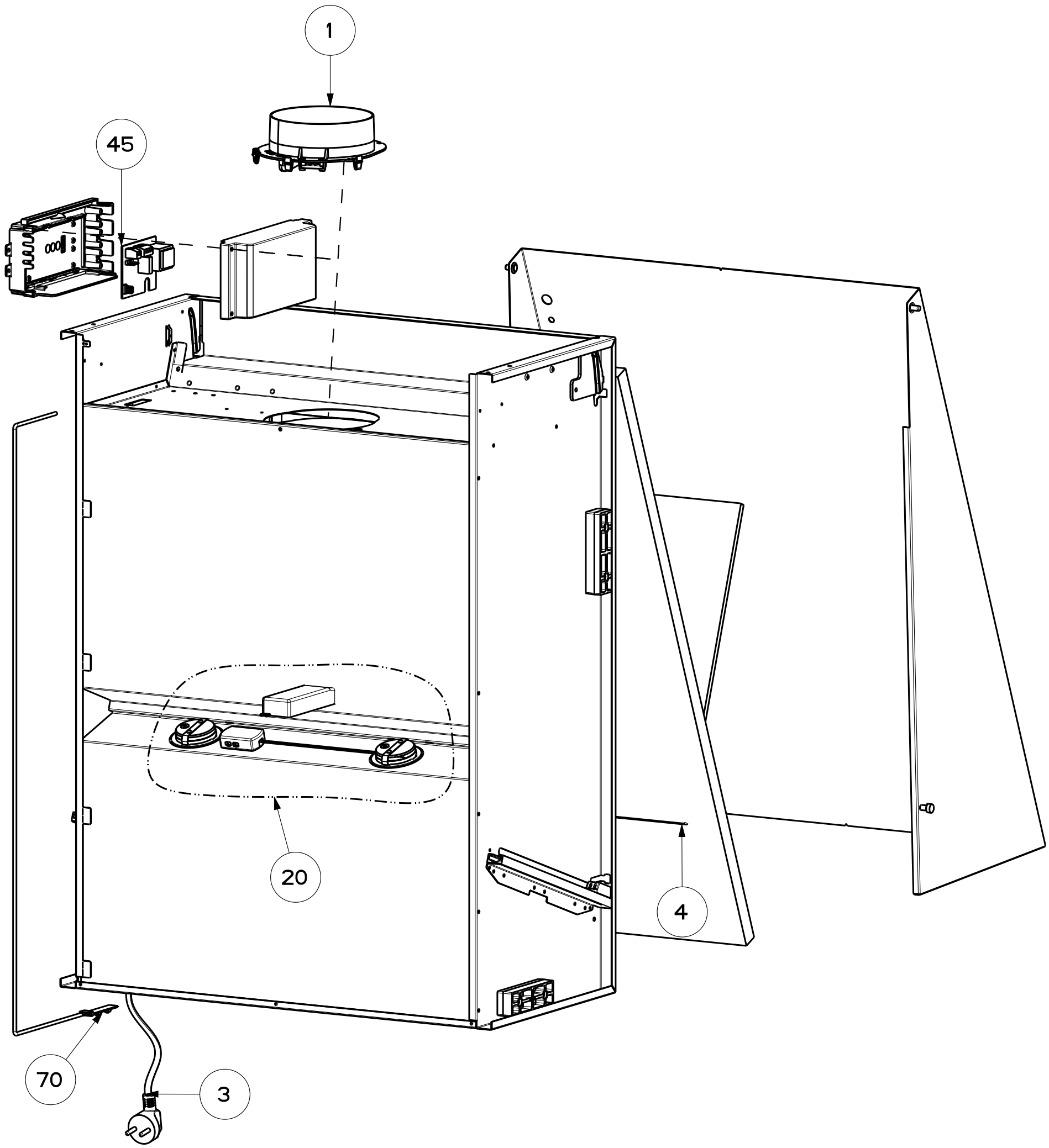


| | |
|---|---|
| Created by **Sharifi, Assar** | |
| Denomination<br>**Cabinet 800** | |
| Rif. | |
| Modif.by | |
| Approved by **Martinelli, Alessandro** | |
| Approval date **20-Sep-2023** | |
| Doc. status **Released** | |
| Drawing N.<br>310004_710 | Rev<br>01 |