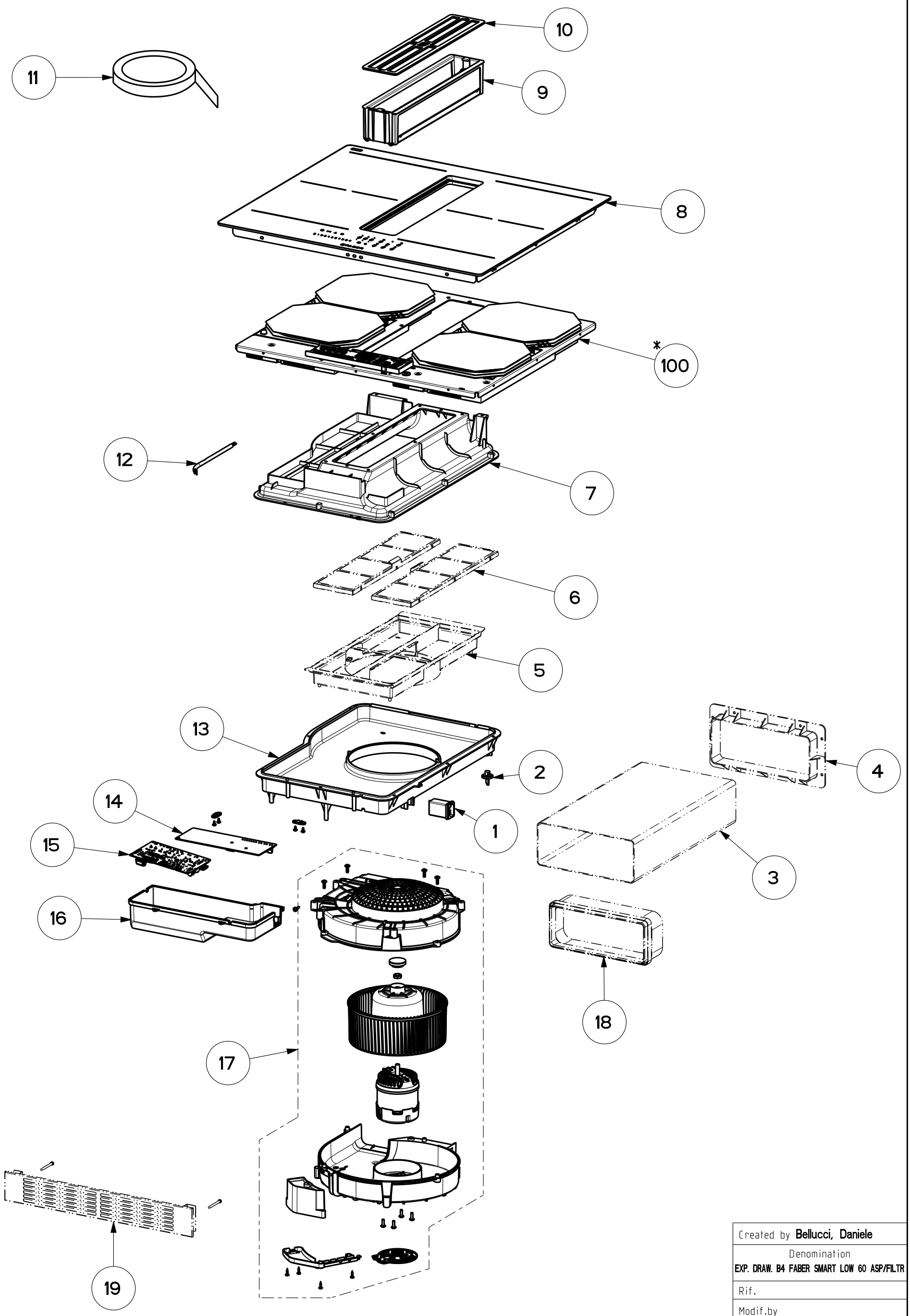

Created by **Bellucci, Daniele**	
Denomination **EXP. DRAW. B4 FABER SMART LOW 60 ASP/FILTR**	
Rif.	
Modif.by	
Approved by **Bellucci, Daniele**	
Approval date **30-Oct-2023**	
Doc. status **Released**	
Drawing N. 340006_1042	Rev 01