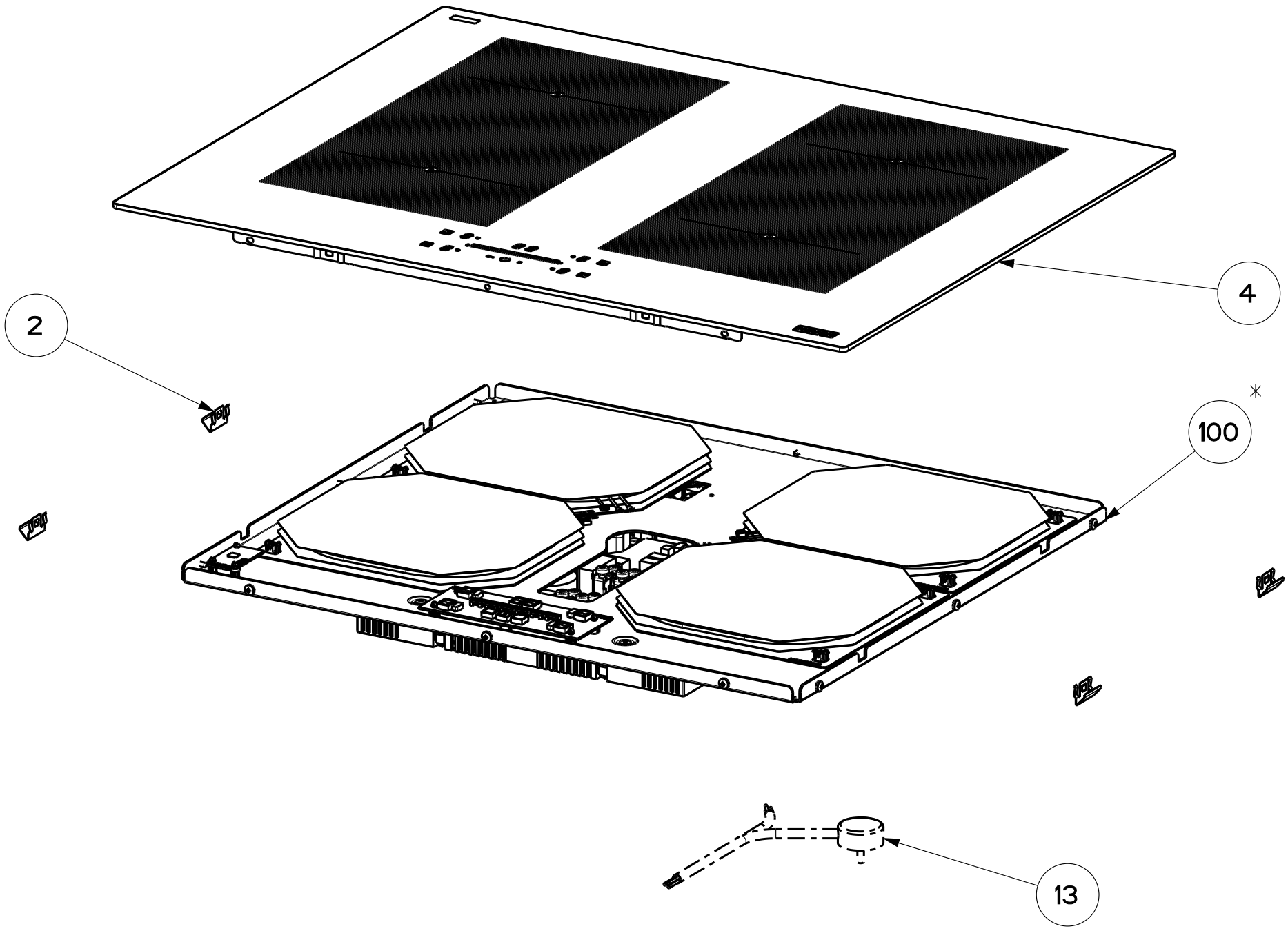

Created by **Mosca, Martina**	
Denomination **EXP DRW IND B4 650x510 4F BT TC SK1 FK**	
Rif.	
Modif.by	
Approved by **Romani, Fabio**	
Approval date **07-Dec-2023**	
Doc. status **Released**	
Drawing N. **108001_790**	Rev **02**