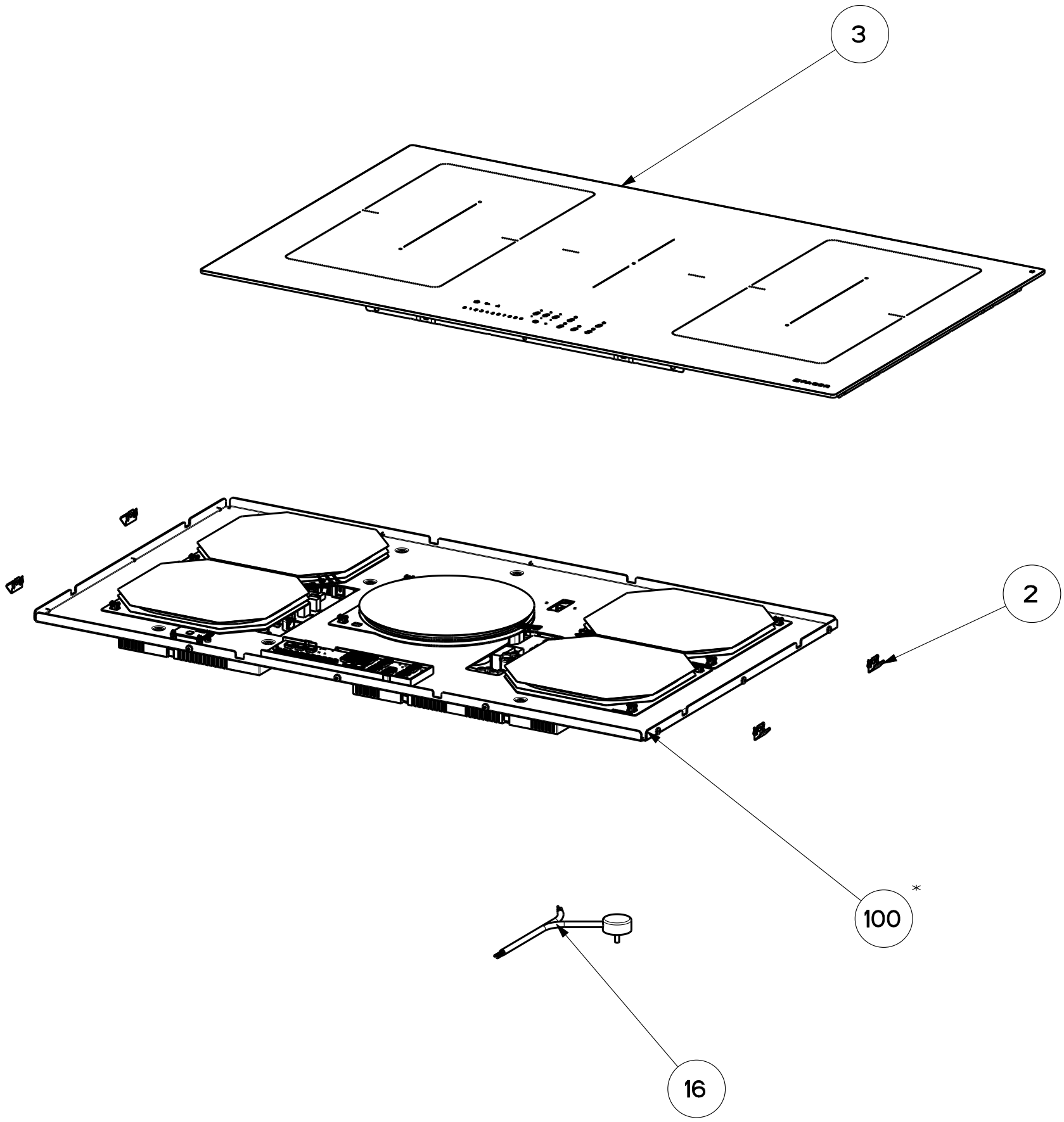

Created by **Mosca, Martina**	
Denomination **EXP DRW IND B4 BT SK 900X520**	
Rif.	
Modif.by	
Approved by **Romani, Fabio**	
Approval date **07-Dec-2023**	
Doc. status **Released**	
Drawing N. **108001_754**	Rev **02**