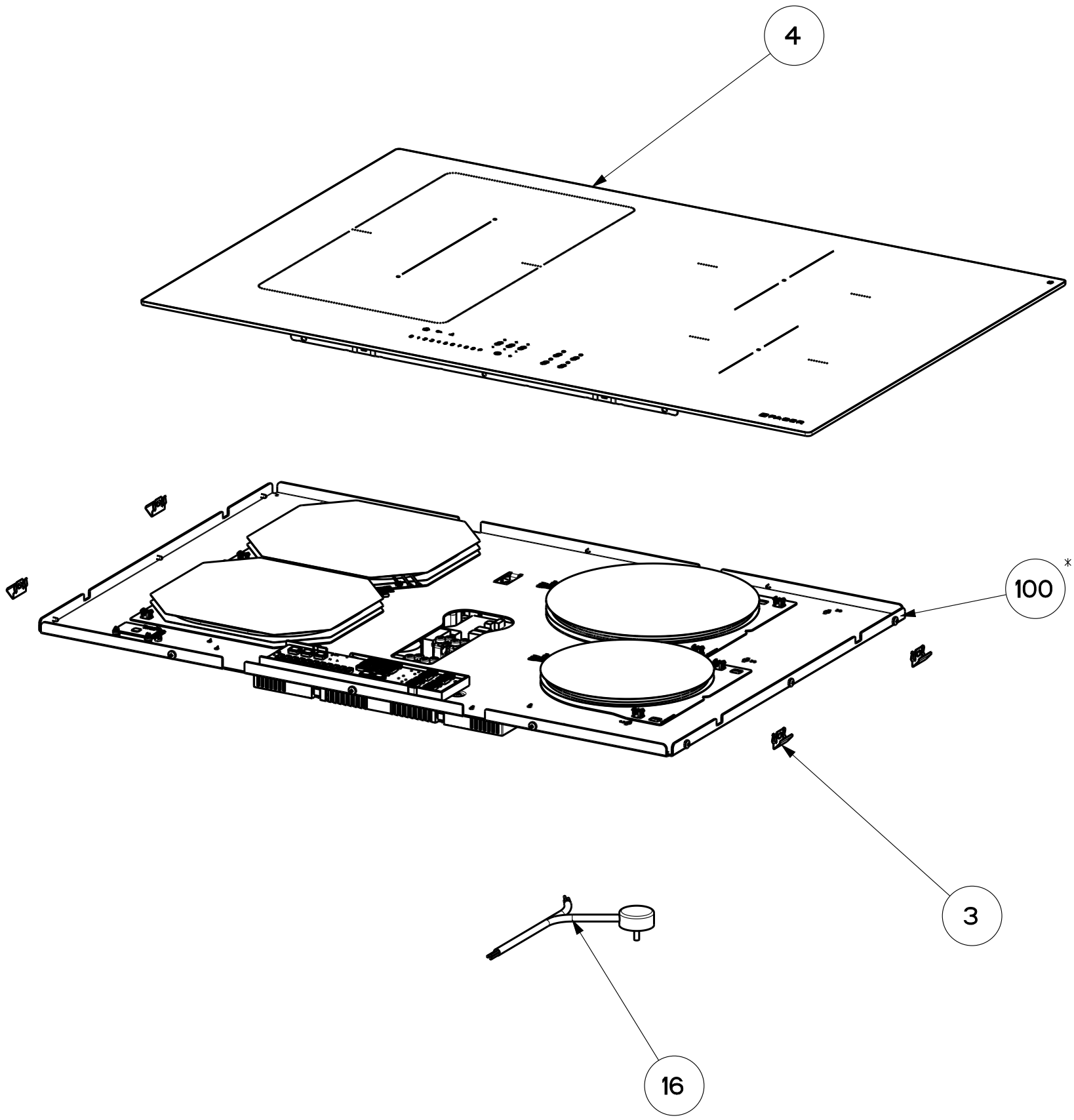

Created by **Mosca, Martina**	
Denomination **EXPL DRW IND B4 BT SK 780X520**	
Rif.	
Modif.by **Mosca, Martina**	
Approved by **Romani, Fabio**	
Approval date **07-Dec-2023**	
Doc. status **Released**	
Drawing N. **108001_746**	Rev **02**