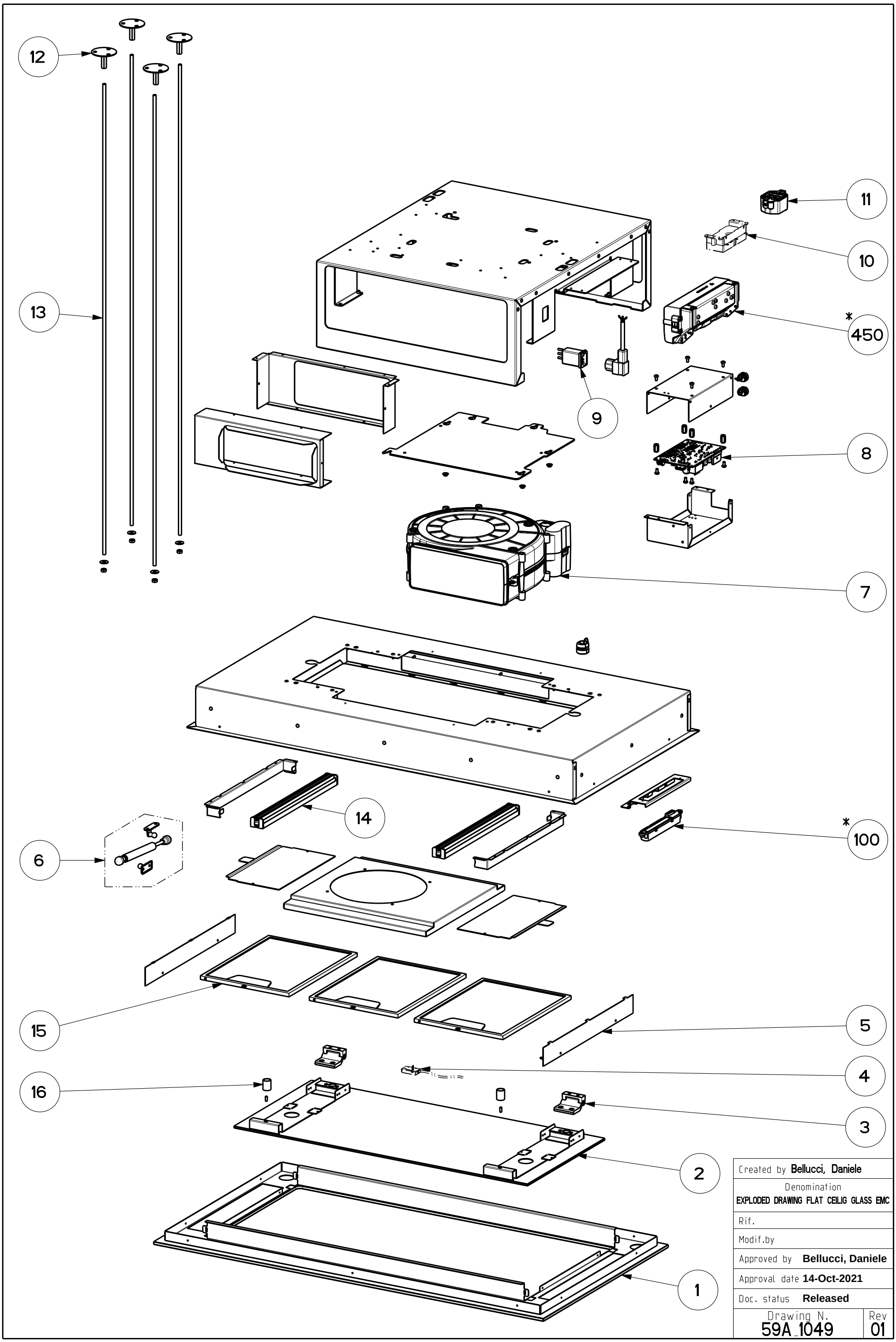

Created by **Bellucci, Daniele**	
Denomination **EXPLODED DRAWING FLAT CEILIG GLASS EMC**	
Rif.	
Modif.by	
Approved by **Bellucci, Daniele**	
Approval date **14-Oct-2021**	
Doc. status **Released**	
Drawing N. 59A_1049	Rev 01