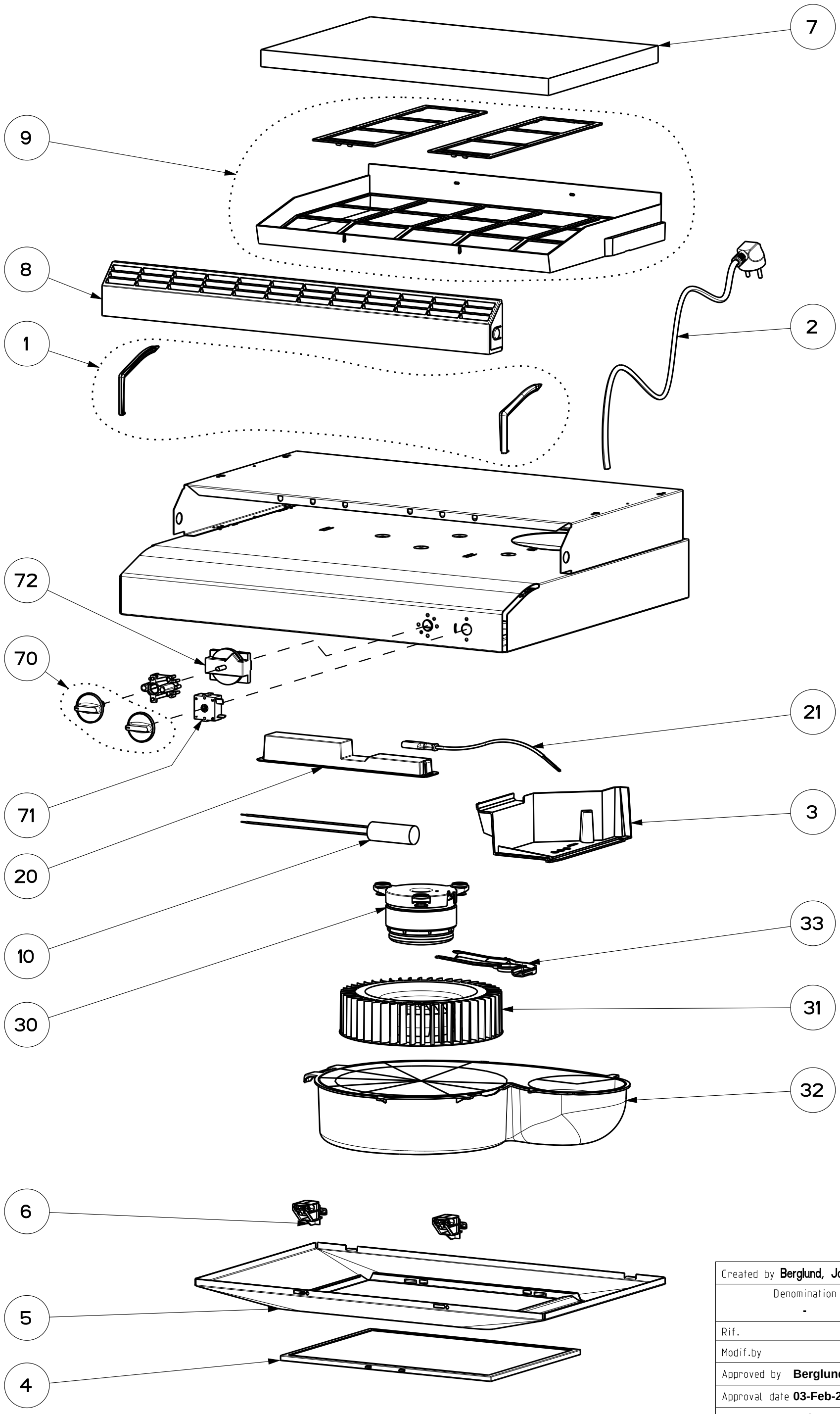

Created by **Berglund, Jonas**	
Denomination -	
Rif.	
Modif.by	
Approved by **Berglund, Jonas**	
Approval date **03-Feb-2022**	
Doc. status **Released**	
Drawing N. 300025_705	Rev 01