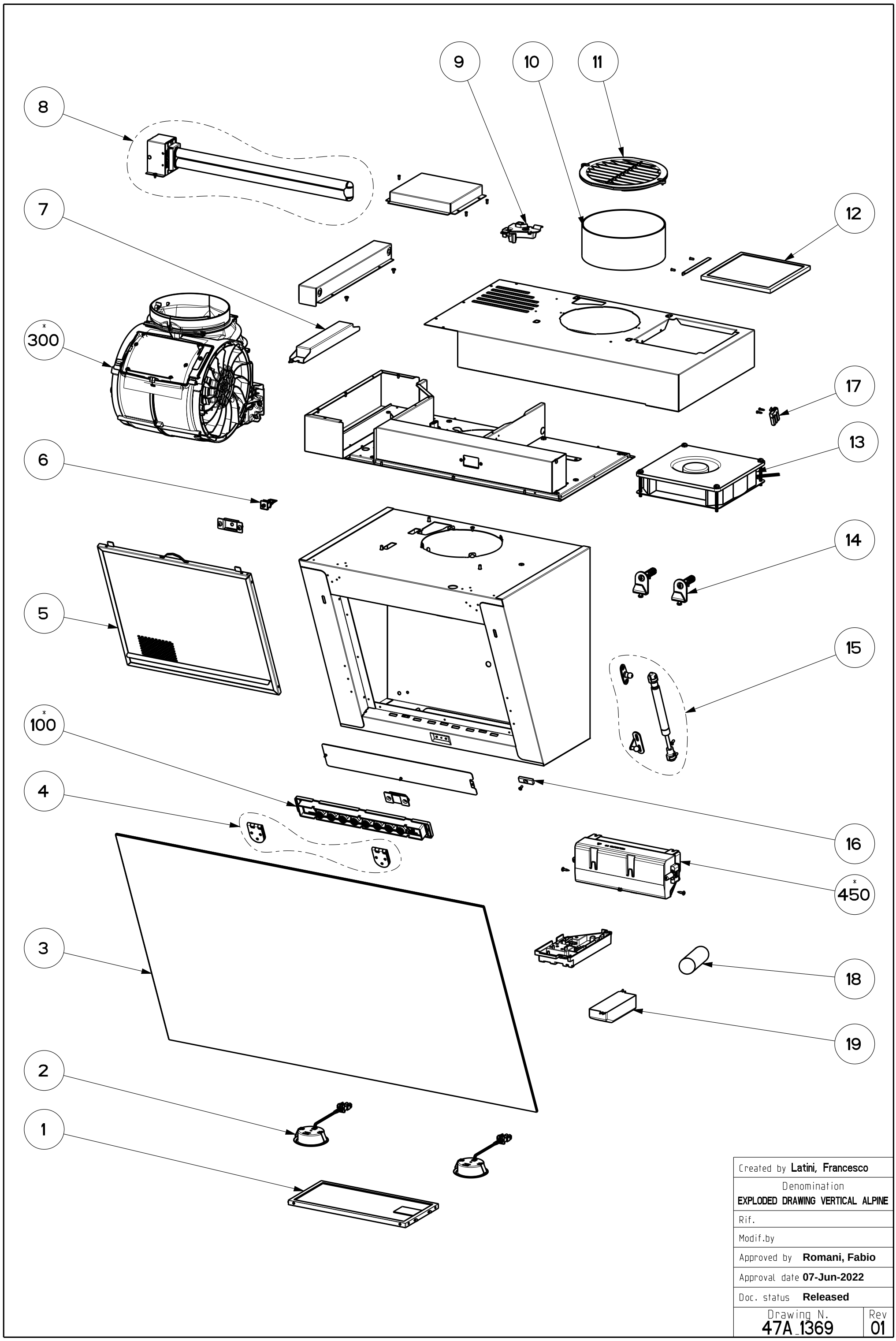

Created by Latini, Francesco	
Denomination EXPLODED DRAWING VERTICAL ALPINE	
Rif.	
Modif.by	
Approved by Romani, Fabio	
Approval date 07-Jun-2022	
Doc. status Released	
Drawing N. 47A_1369	Rev 01