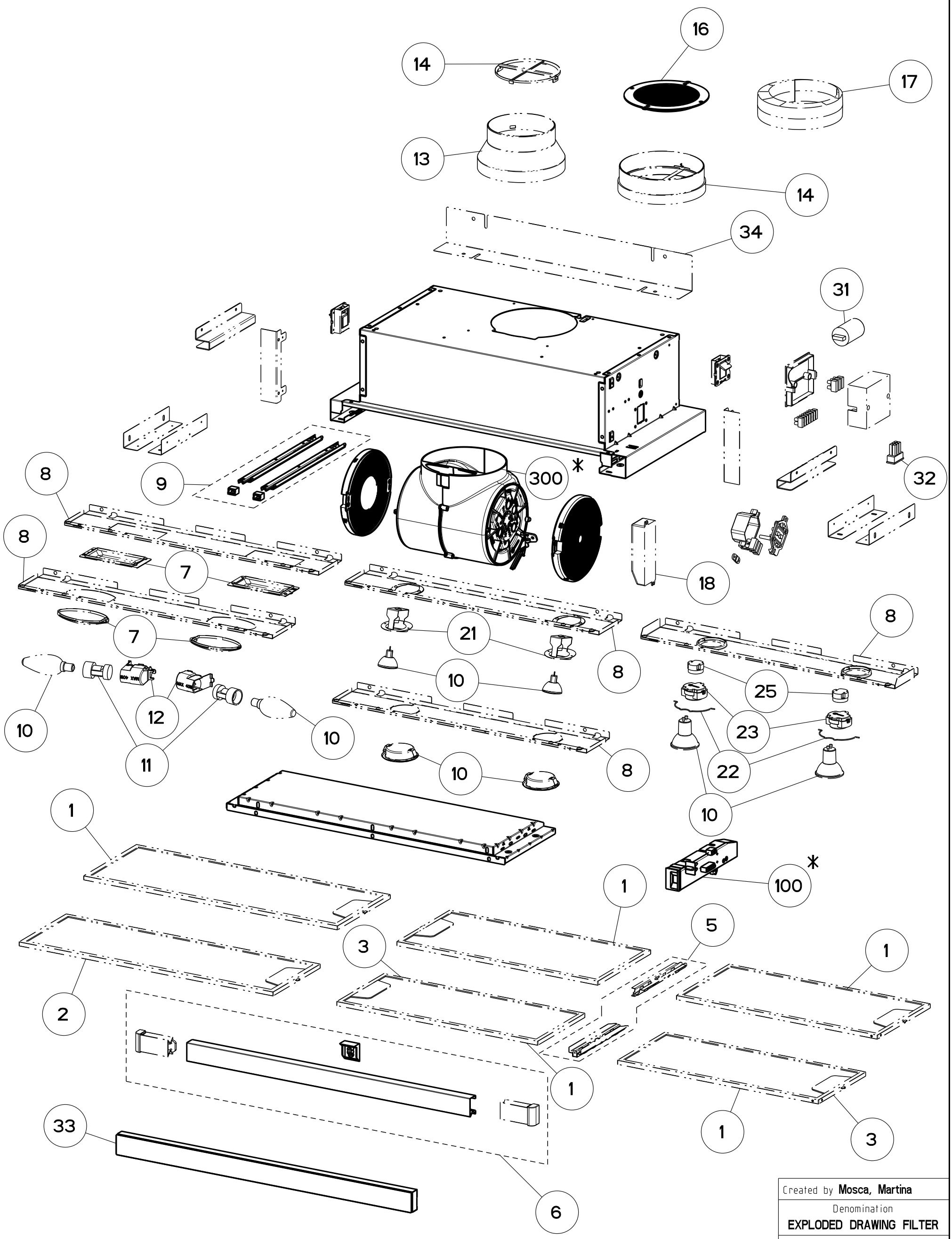

Created by **Mosca, Martina**	
Denomination **EXPLODED DRAWING FILTER**	
Rif.	
Modif.by **Mosca, Martina**	
Approved by **Palazzi, Walter**	
Approval date **14-Sep-2022**	
Doc. status **Released**	
Drawing N. **11A_701**	Rev **08**