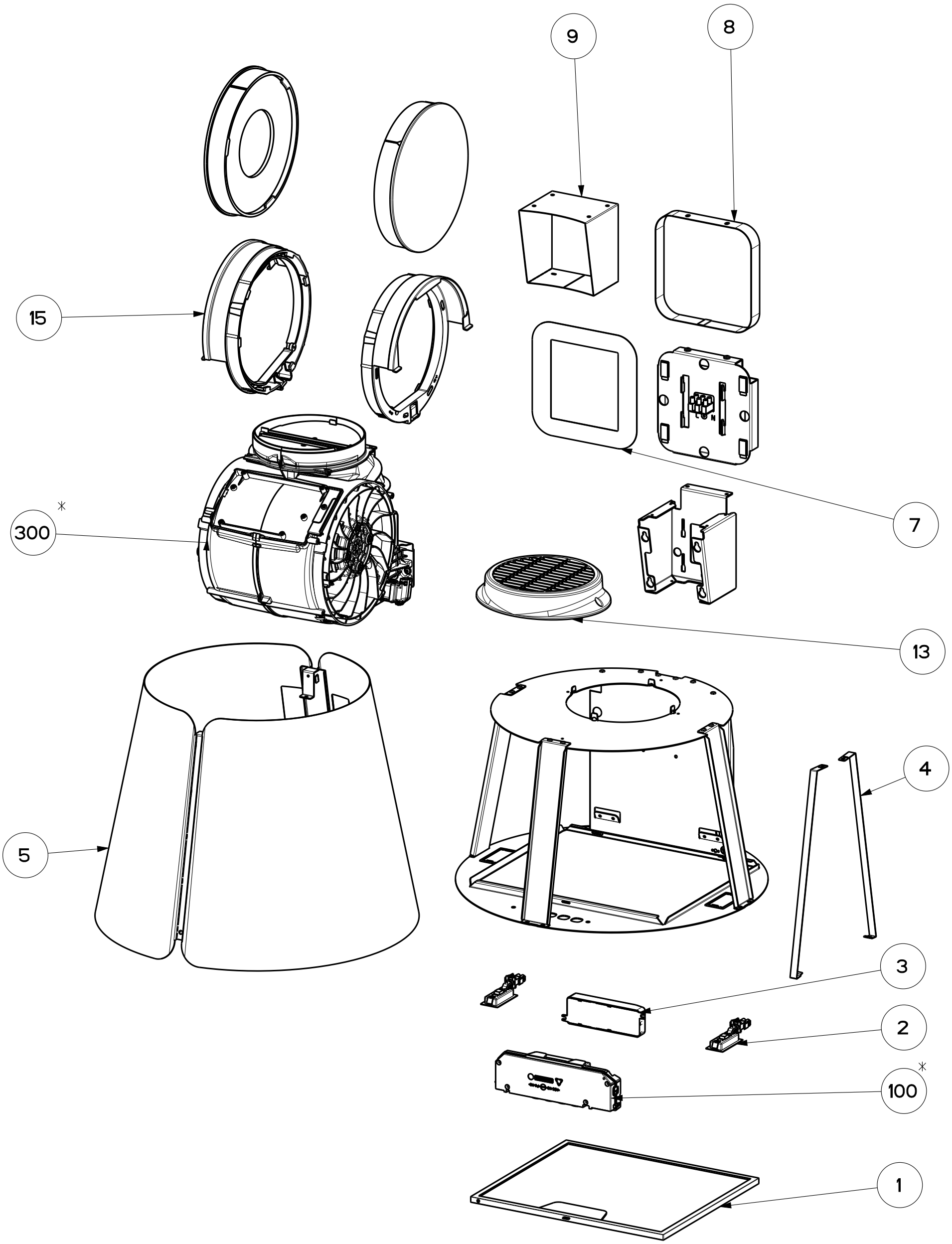

Created by **Stopponi, Fabio**	
Denomination **EXPLODED DRAWING CONE**	
Rif.	
Modif.by	
Approved by **Palazzi, Walter**	
Approval date **03-Nov-2022**	
Doc. status **Released**	
Drawing N. 335076_715	Rev 01