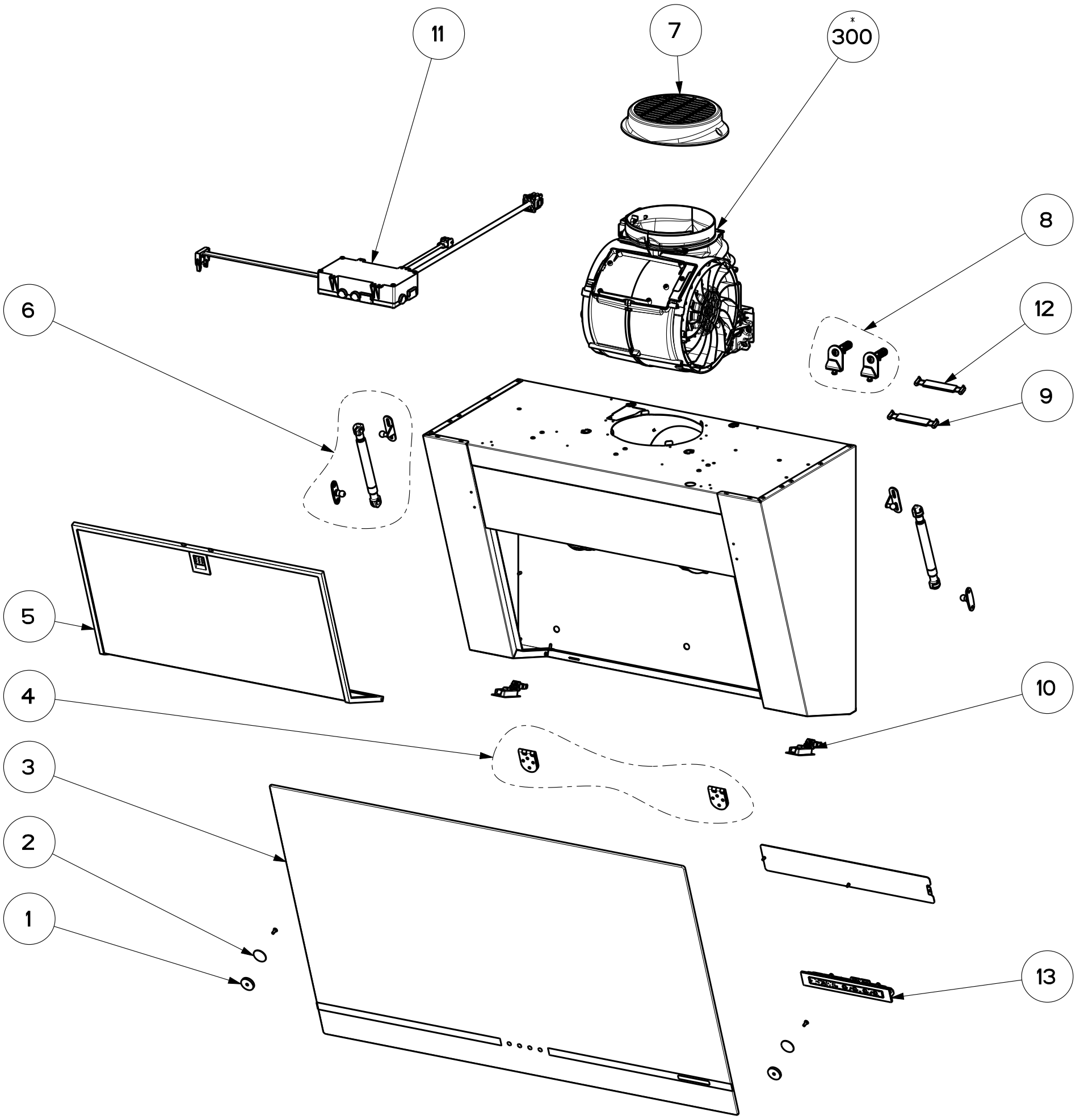

Created by	Latini, Francesco
Denomination	EXPLODED DRAWING TRUE
Rif.	
Modif.by	
Approved by	Bellucci, Daniele
Approval date	14-Apr-2023
Doc. status	Released
Drawing N. 330071_763	Rev 01