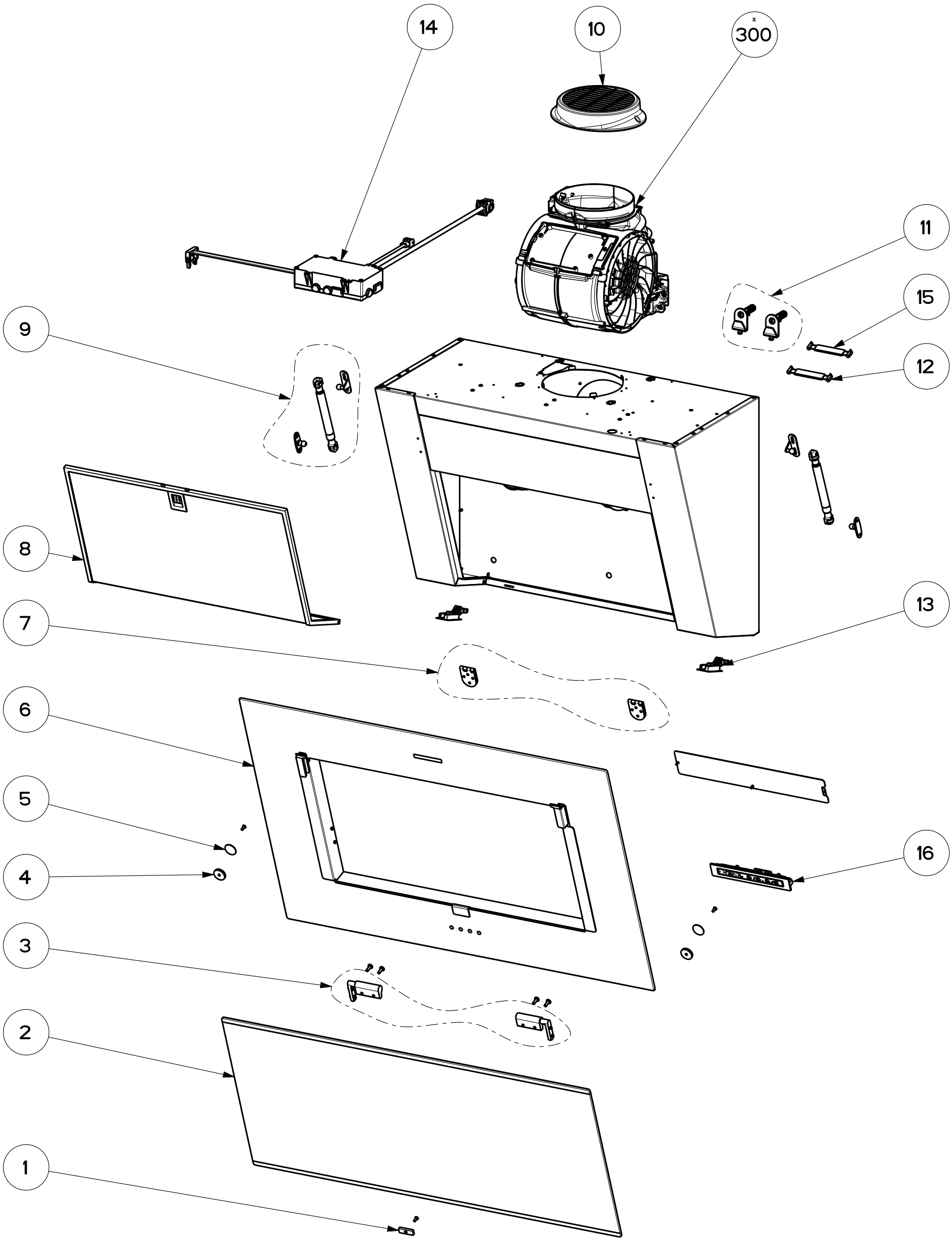

Created by **Latini, Francesco**	
Denomination **EXPLODED DRAWING TRUE DOUBLE**	
Rif.	
Modif.by	
Approved by **Bellucci, Daniele**	
Approval date **14-Apr-2023**	
Doc. status **Released**	
Drawing N. 330071_761	Rev 01