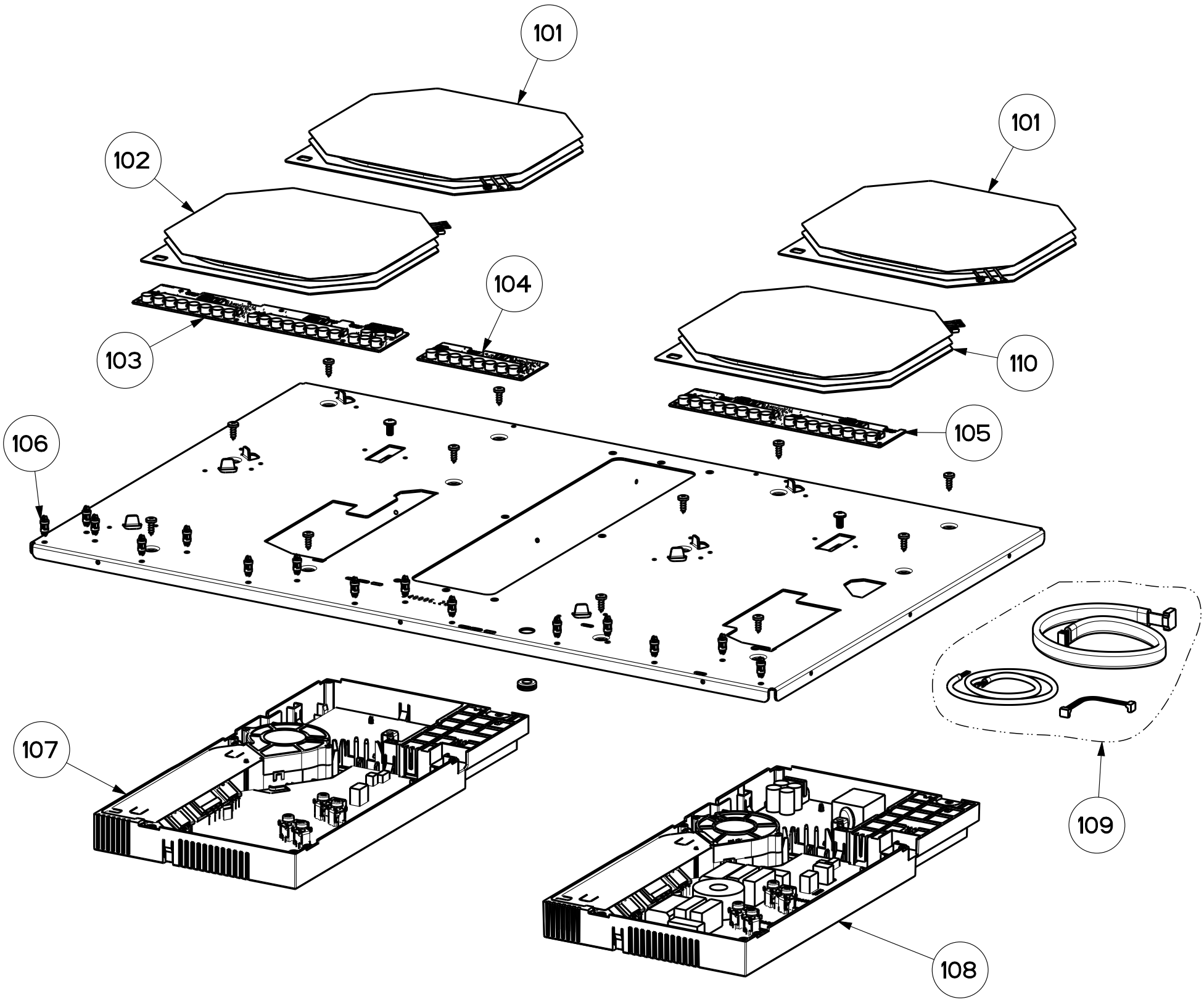

Created by **Bellucci, Daniele**	
Denomination **EXP. DRAW. INDUCTION 4 OCTA B4 75**	
Rif.	
Modif.by	
Approved by **Bellucci, Daniele**	
Approval date **19-Jan-2024**	
Doc. status **Released**	
Drawing N. **340006_1029**	Rev **01**