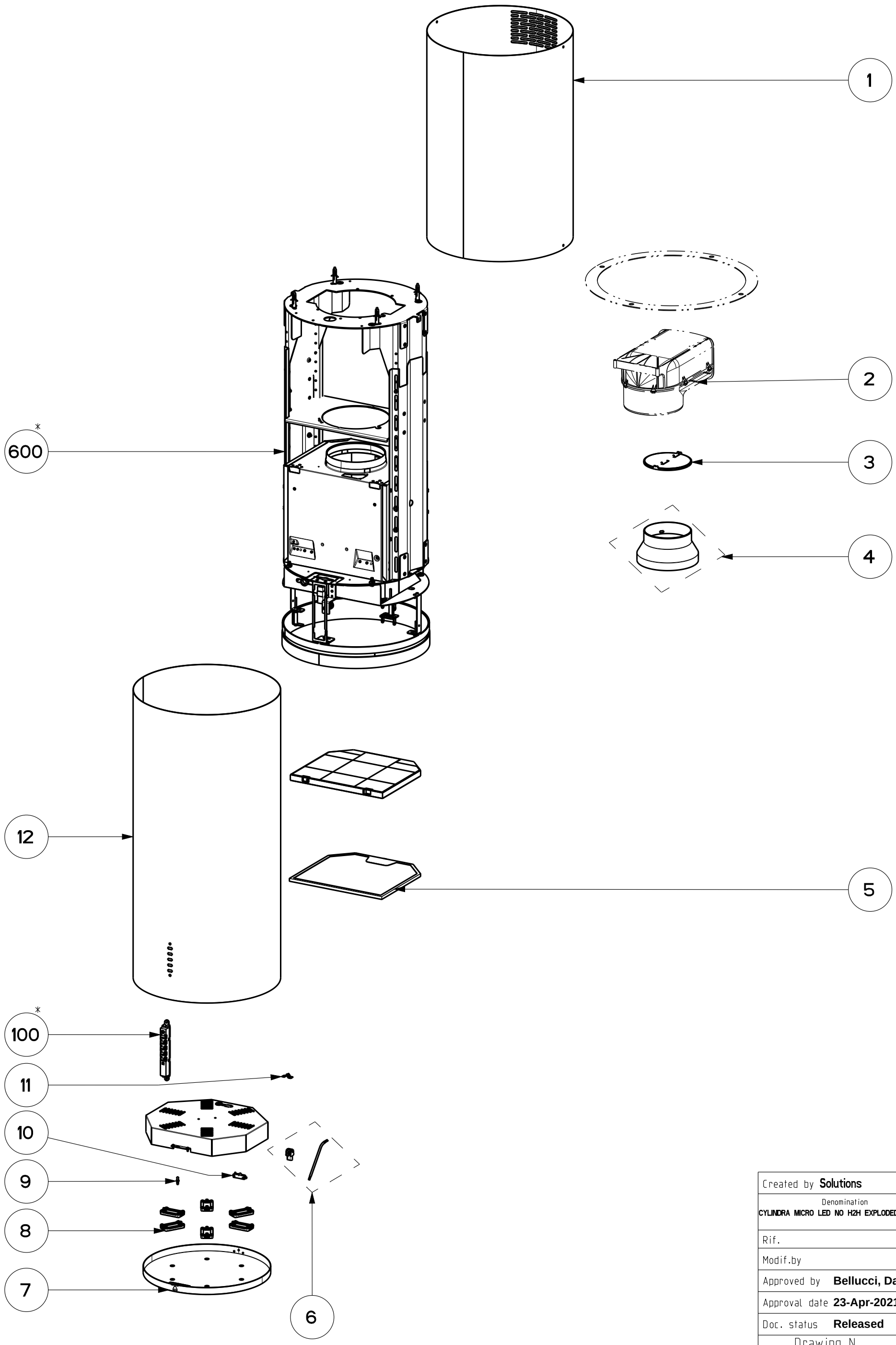

Created by	Solutions
Denomination	CYLINDRA MICRO LED NO H2H EXPLODED DRAWING
Rif.	
Modif.by	
Approved by	Bellucci, Daniele
Approval date	23-Apr-2021
Doc. status	Released
Drawing N.	A82_856
Rev	02