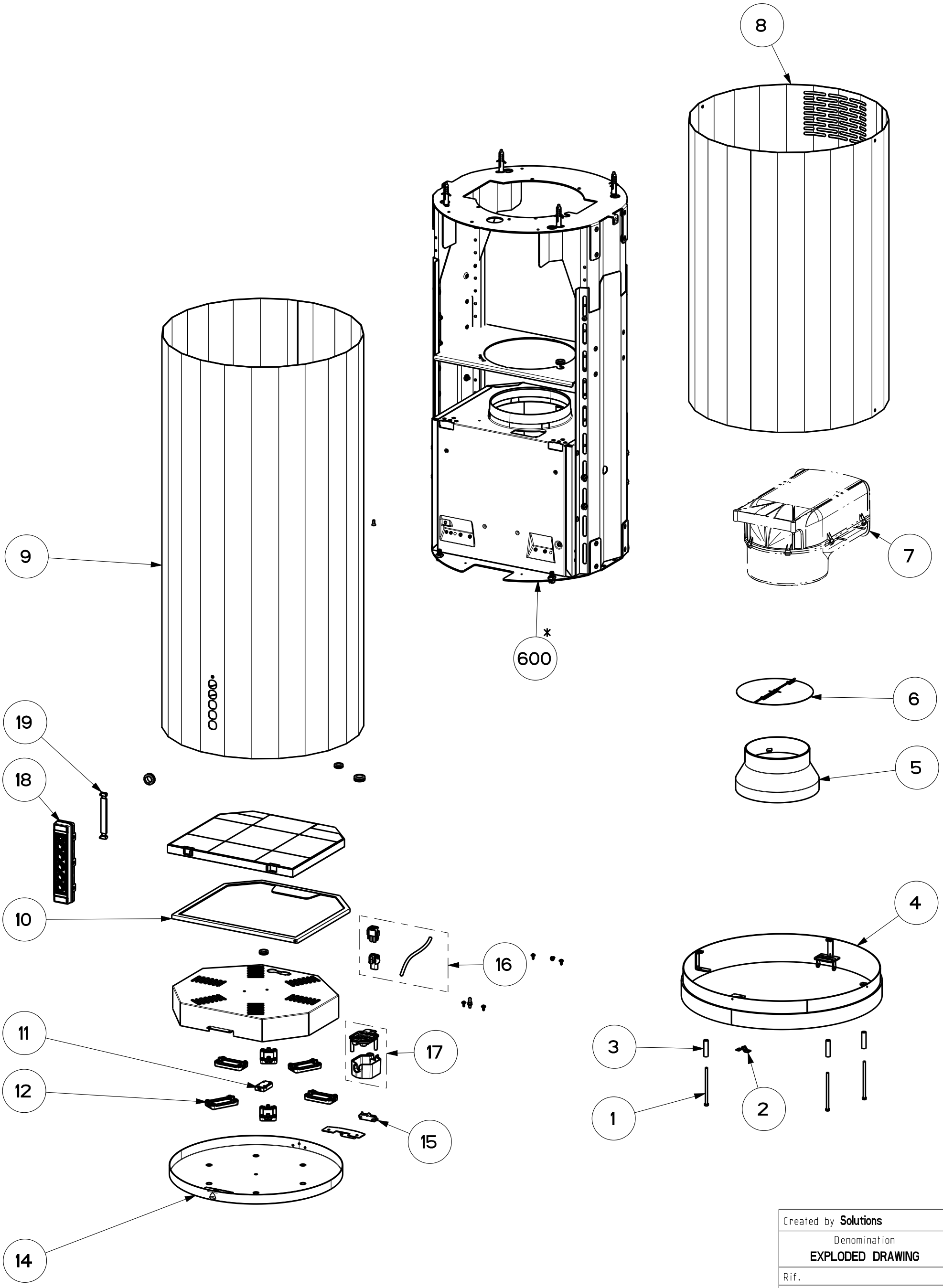

Created by **Solutions**	
Denomination **EXPLODED DRAWING**	
Rif.	
Modif.by	
Approved by **Bellucci, Daniele**	
Approval date **23-Apr-2021**	
Doc. status **Released**	
Drawing N. **22B_716**	Rev **02**