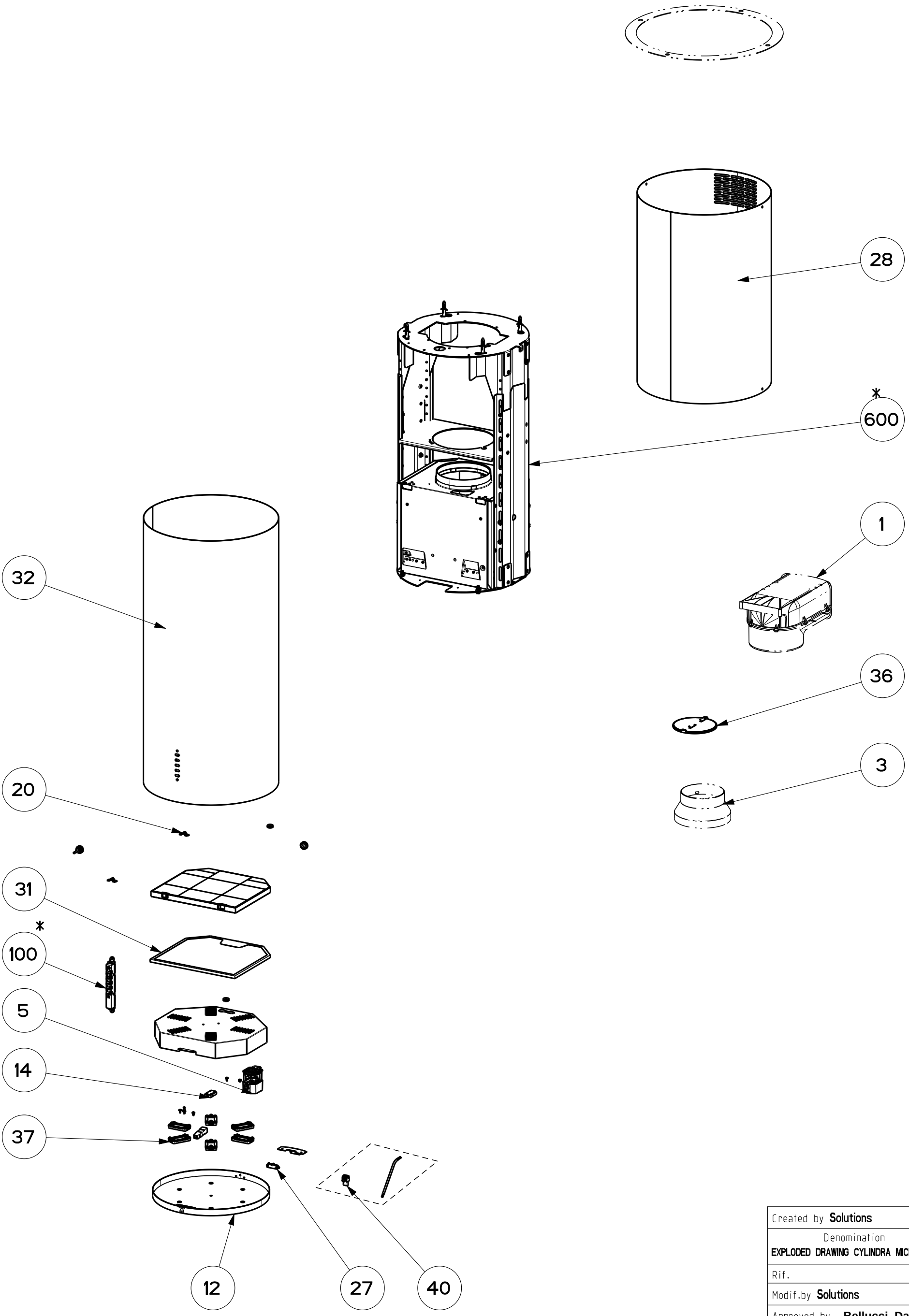

Created by **Solutions**	
Denomination **EXPLODED DRAWING CYLINDRA MICRO LED**	
Rif.	
Modif.by **Solutions**	
Approved by **Bellucci, Daniele**	
Approval date **23-Apr-2021**	
Doc. status **Released**	
Drawing N. A82_851	Rev 03