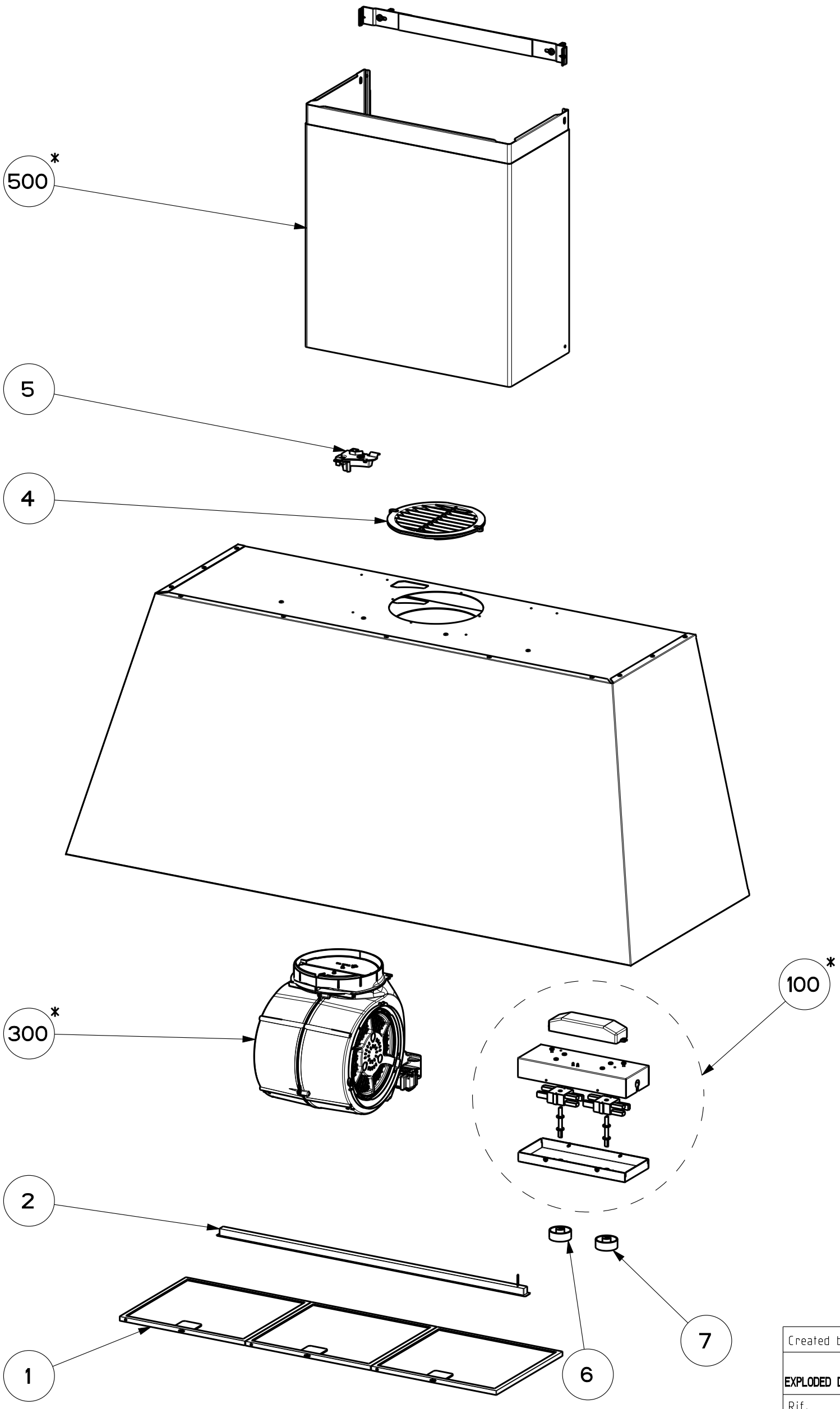

Created by **Bellucci, Daniele**	
Denomination **EXPLODED DRAWING XL 110 LED BAR SLIM**	
Rif.	
Modif.by	
Approved by **Bellucci, Daniele**	
Approval date **02-Oct-2021**	
Doc. status **Released**	
Drawing N. 321014_734	Rev 01