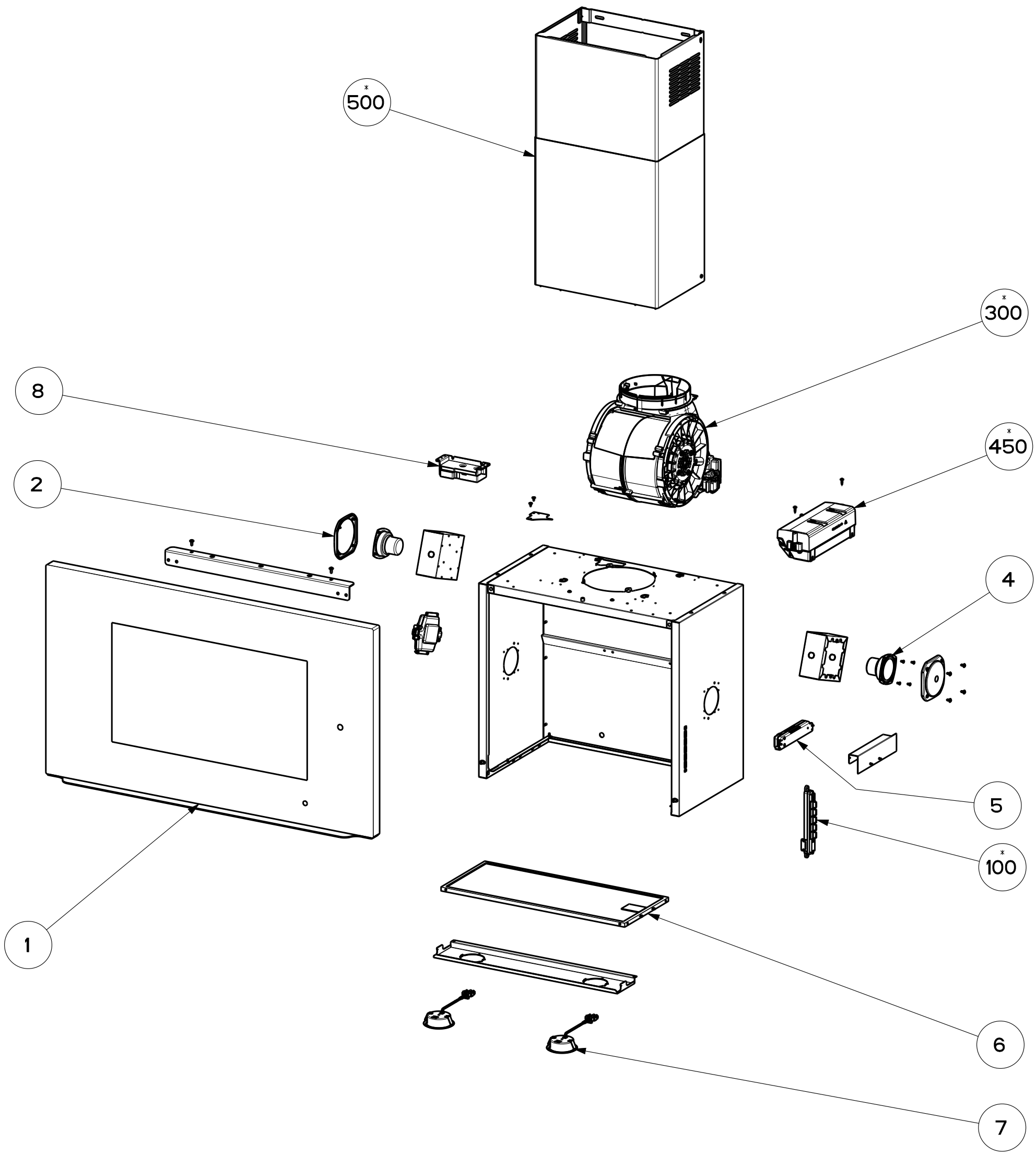

Created by	Latini, Francesco
Denomination	EXPLODED DRAWING
Rif.	
Modif.by	
Approved by	Romani, Fabio
Approval date	25-Oct-2021
Doc. status	Released
Drawing N. 330063_714	Rev 02