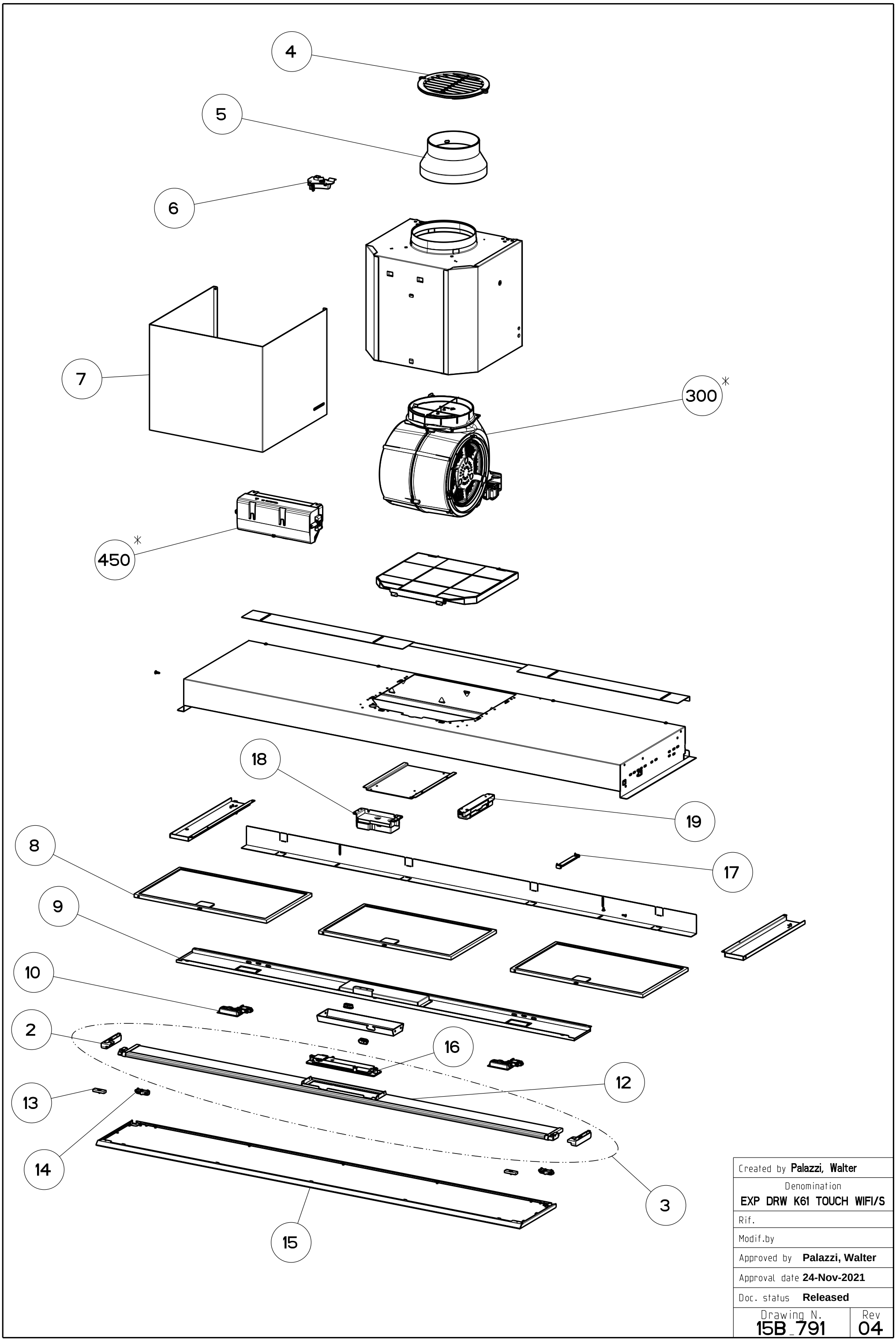

Created by **Palazzi, Walter**	
Denomination **EXP DRW K61 TOUCH WIFI/S**	
Rif.	
Modif.by	
Approved by **Palazzi, Walter**	
Approval date **24-Nov-2021**	
Doc. status **Released**	
Drawing N. **15B_791**	Rev **04**