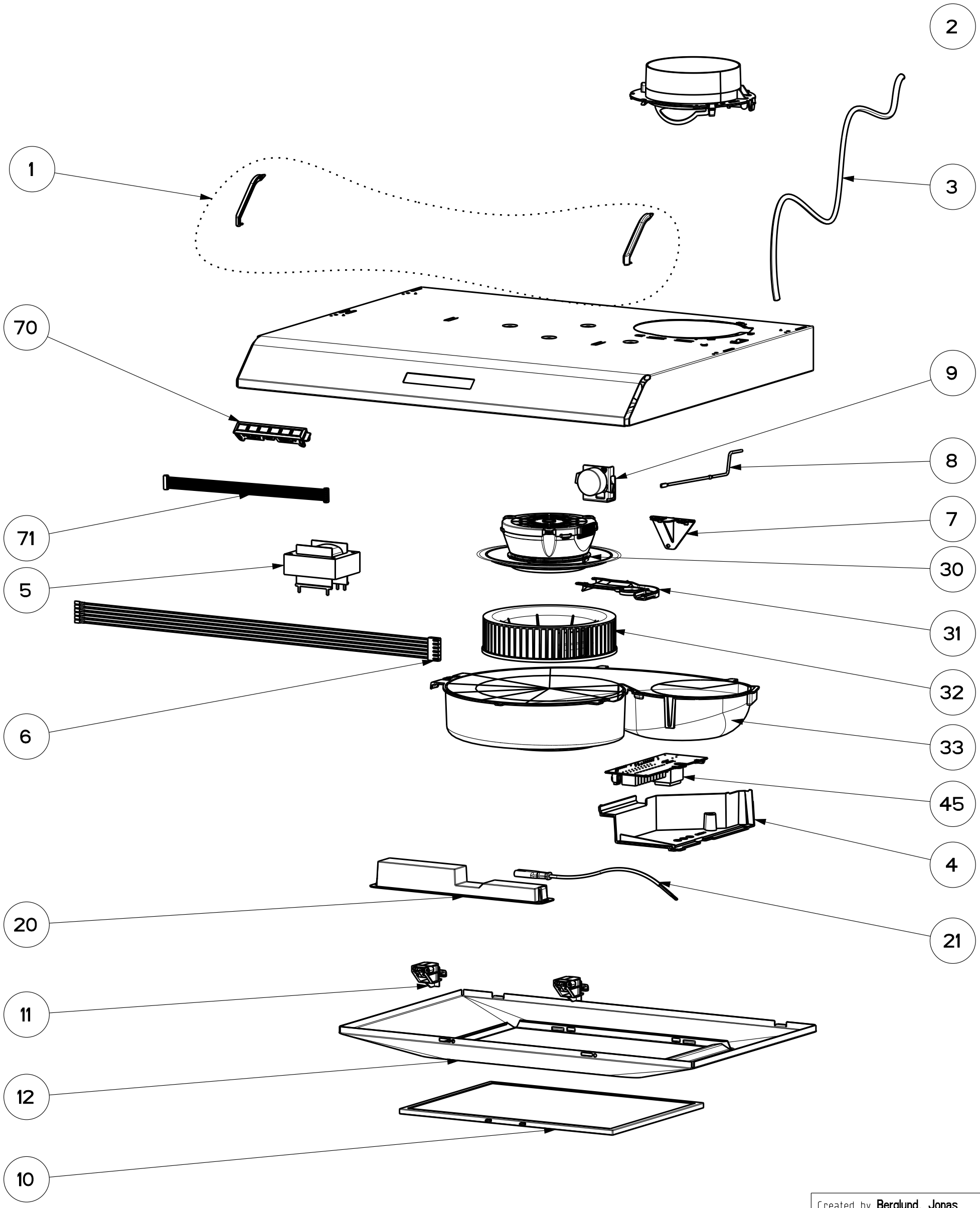

Created by **Berglund, Jonas**	
Denomination **HOOD ALLIANCE 1240B-16**	
Rif.	
Modif.by **Berglund, Jonas**	
Approved by **Berglund, Jonas**	
Approval date **31-Jan-2022**	
Doc. status **Released**	
Drawing N. 300026_705	Rev 01