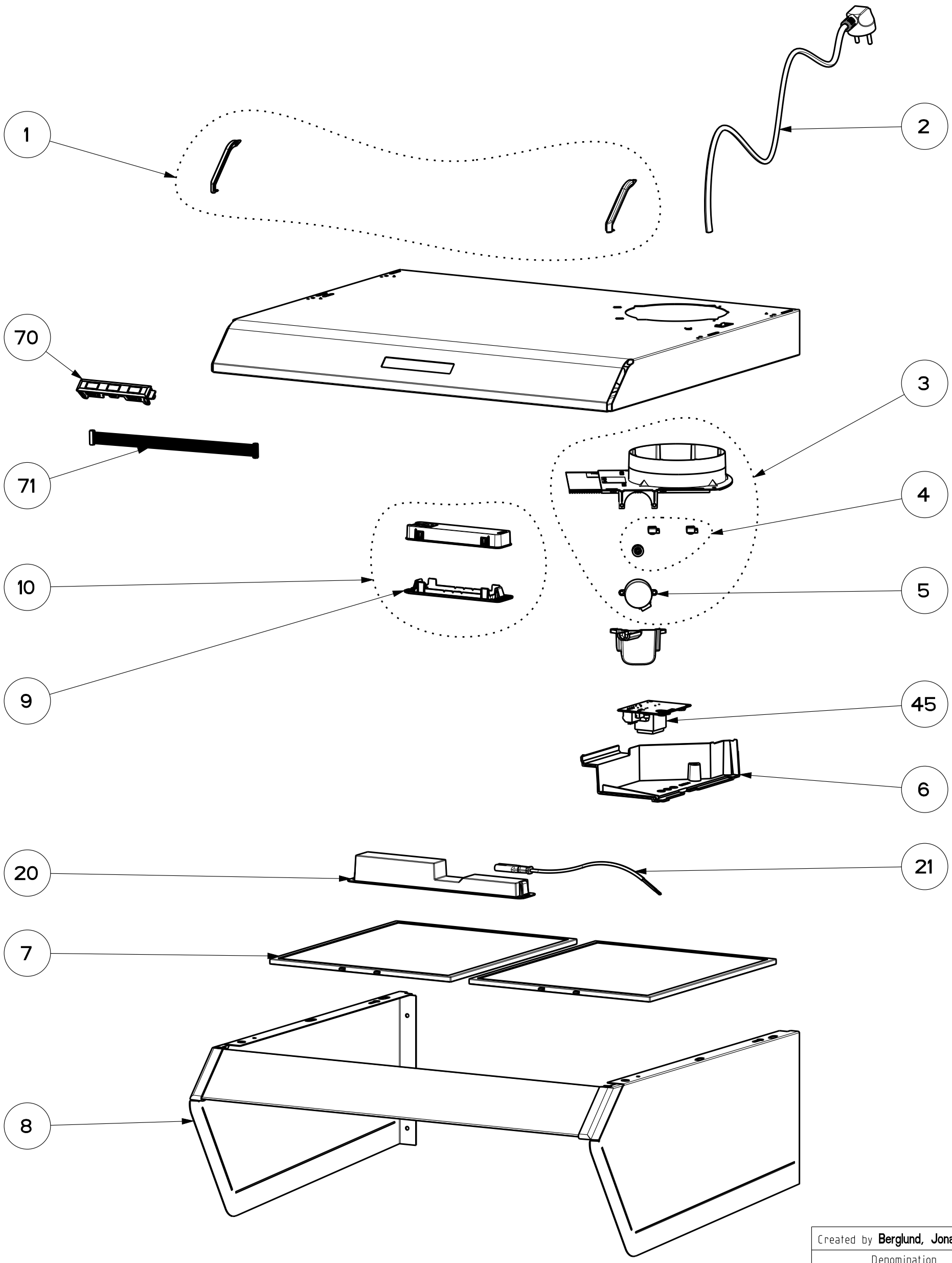

Created by **Berglund, Jonas**	
Denomination **HOOD NON-MOTOR 1222B-10S**	
Rif.	
Modif.by **Berglund, Jonas**	
Approved by **Berglund, Jonas**	
Approval date **01-Feb-2022**	
Doc. status **Released**	
Drawing N. 300026_711	Rev 01