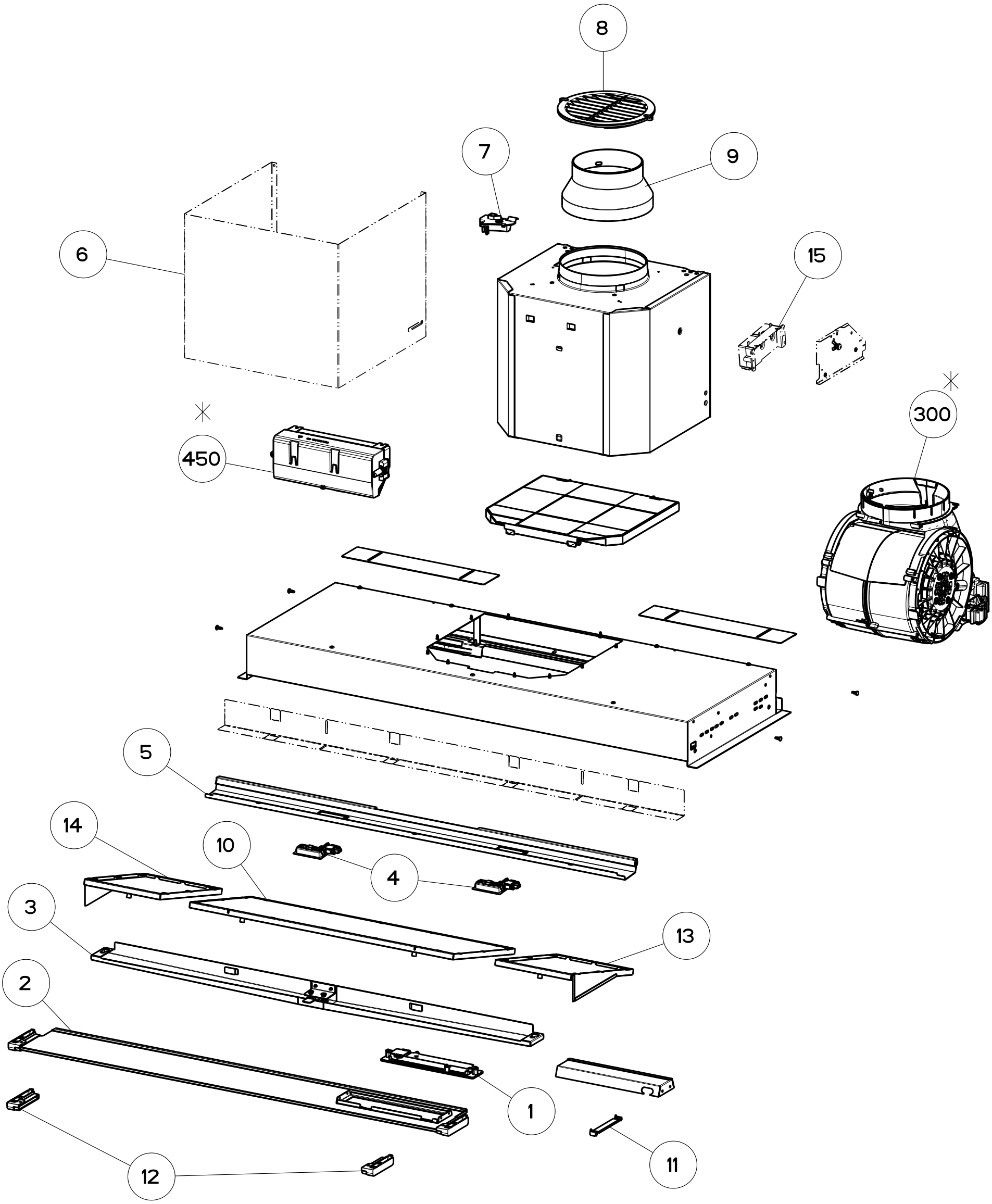


| | |
|---|---|
| Created by **Palazzi, Walter** | |
| Denomination<br>**EXSPLODE DRAWING NODRIP 90/120** | |
| Rif. | |
| Modif.by | |
| Approved by **Palazzi, Walter** | |
| Approval date **25-Mar-2022** | |
| Doc. status **Released** | |
| Drawing N.<br>**15B_827** | Rev<br>**06** |