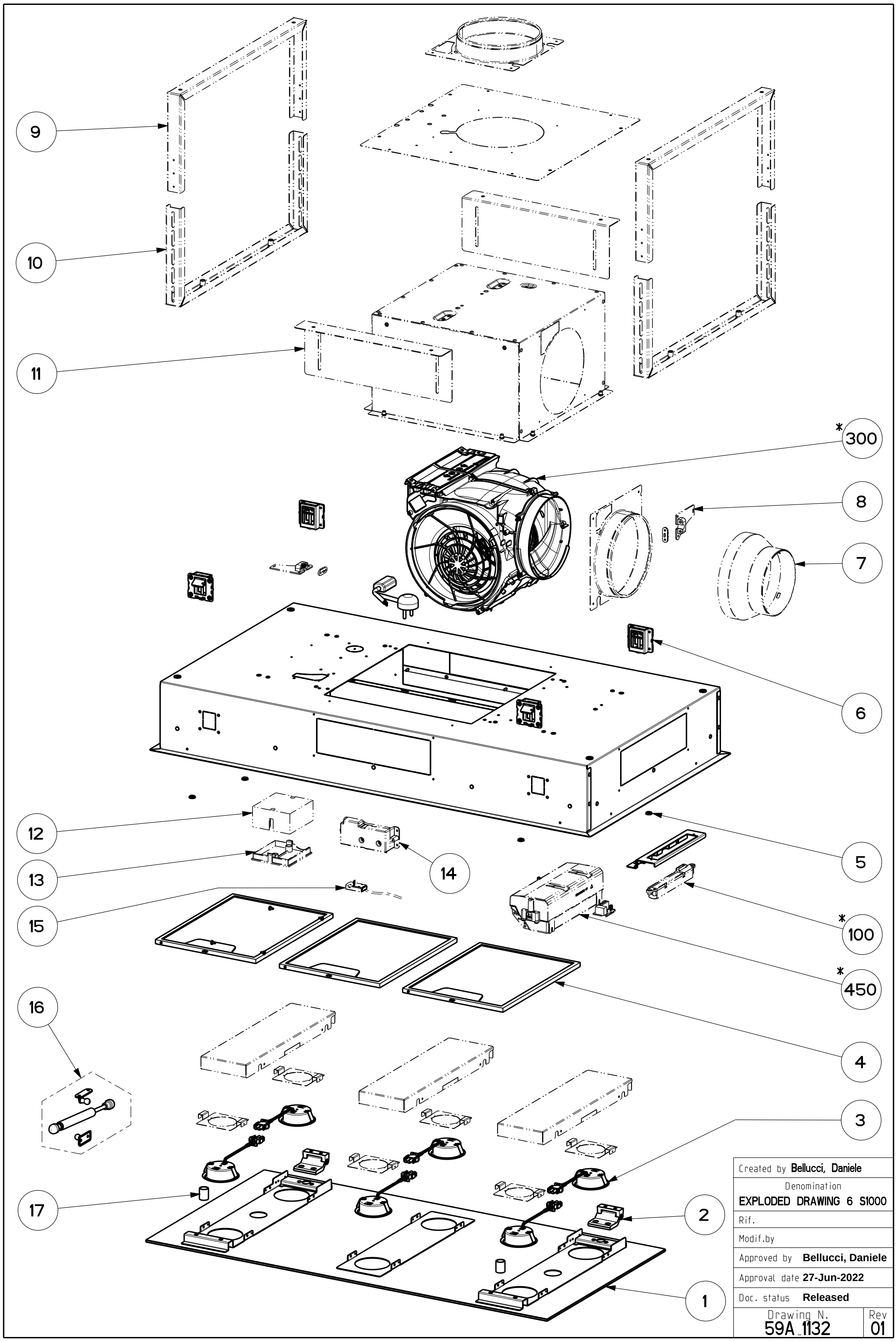

Created by **Bellucci, Daniele**	
Denomination **EXPLODED DRAWING 6 S1000**	
Rif.	
Modif.by	
Approved by **Bellucci, Daniele**	
Approval date **27-Jun-2022**	
Doc. status **Released**	
Drawing N. **59A_1132**	Rev **01**