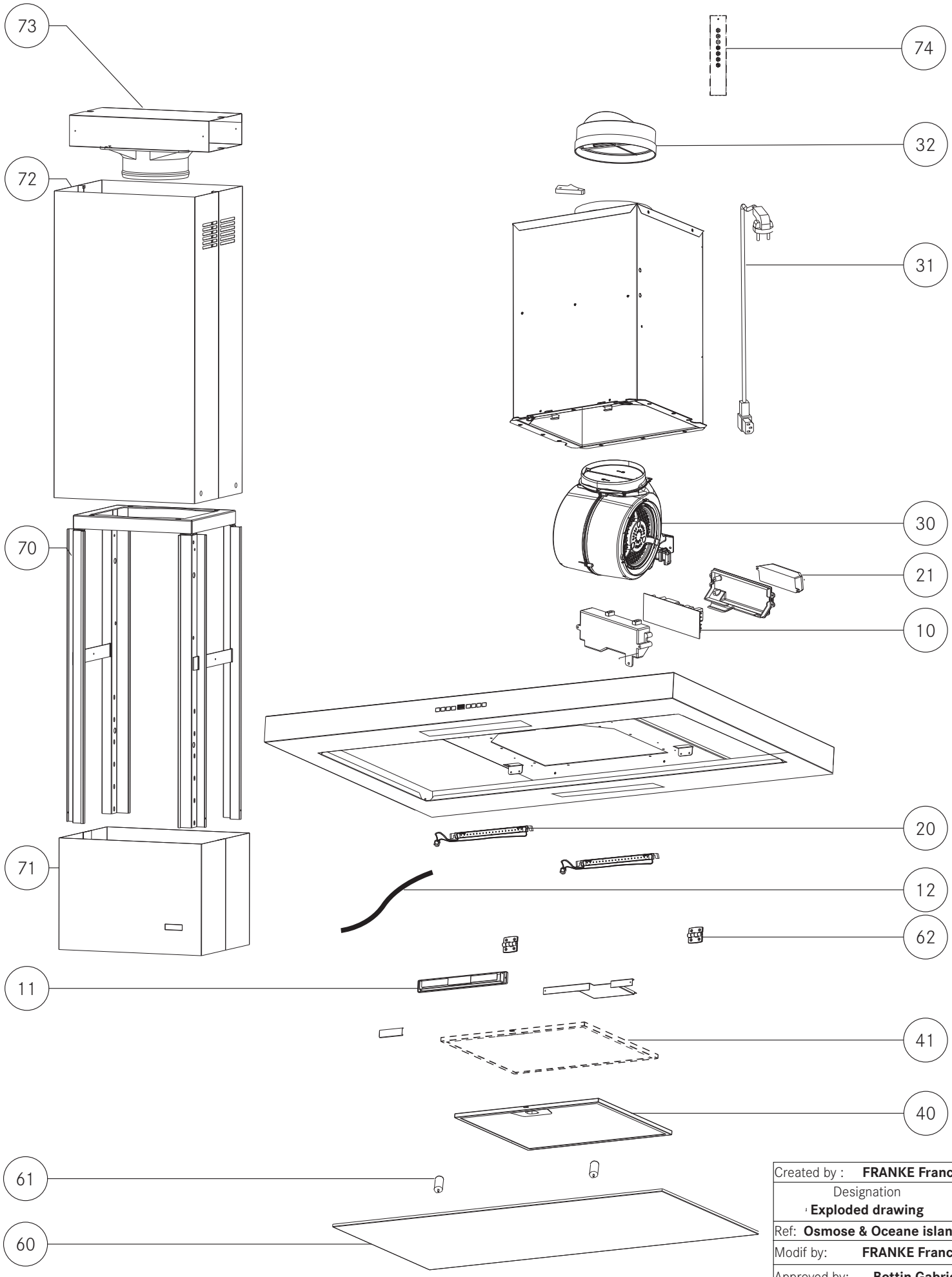

Created by :	**FRANKE France**
Designation	**Exploded drawing**
Ref:	**Osmose & Oceane island**
Modif by:	**FRANKE France**
Approved by:	**Bottin Gabriel**
Approval state:	**06.09.2018**
Doc. Status:	**released**
Drawing N. **325054_710**	Rev. **01**