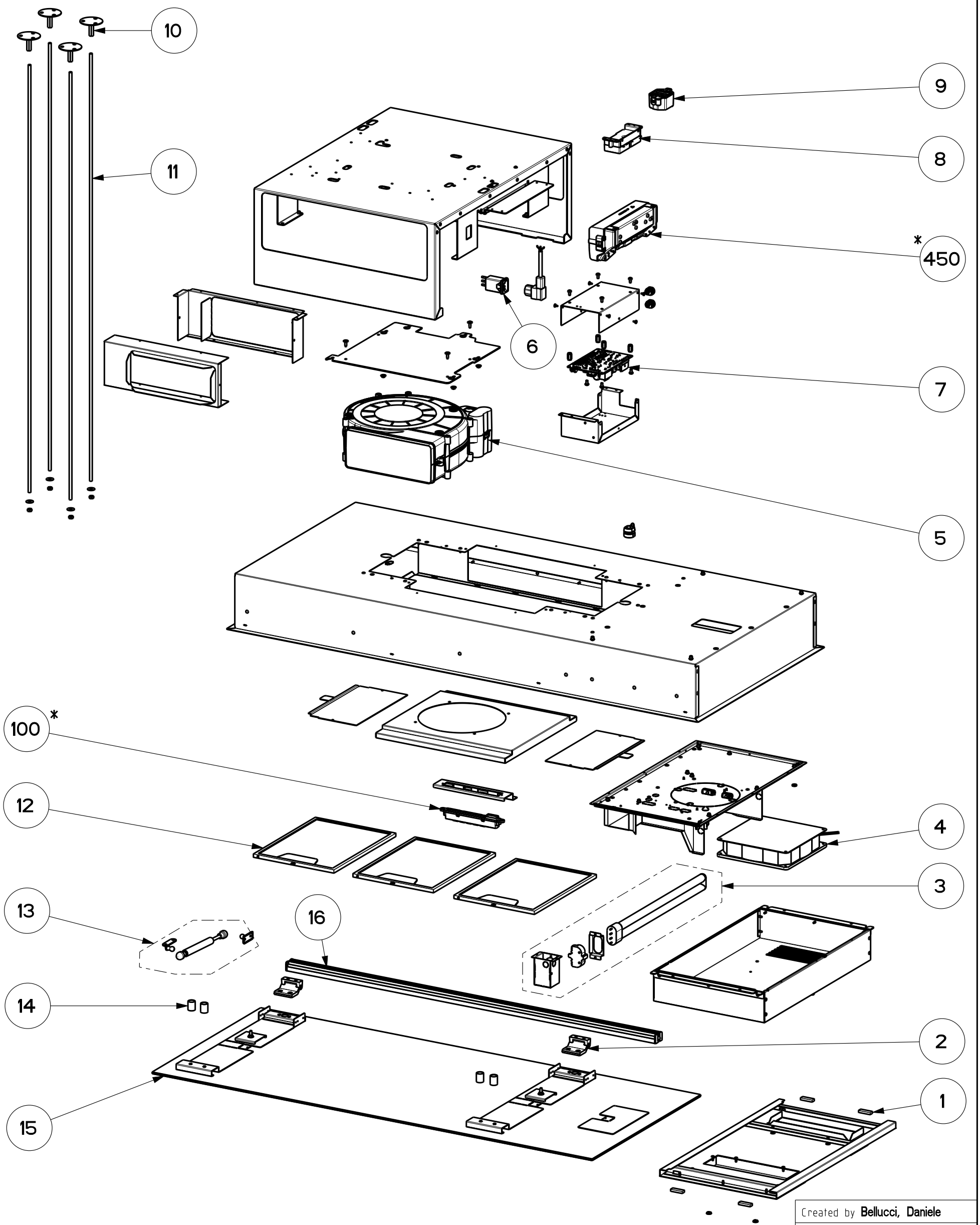

Created by **Bellucci, Daniele**	
Denomination **EXP. DRAW. GLASS FLAT CEILING LED BAR L940 EMC ALPINE**	
Rif.	
Modif.by	
Approved by **Bellucci, Daniele**	
Approval date **24-Oct-2022**	
Doc. status **Released**	
Drawing N. 59A_1130	Rev 01