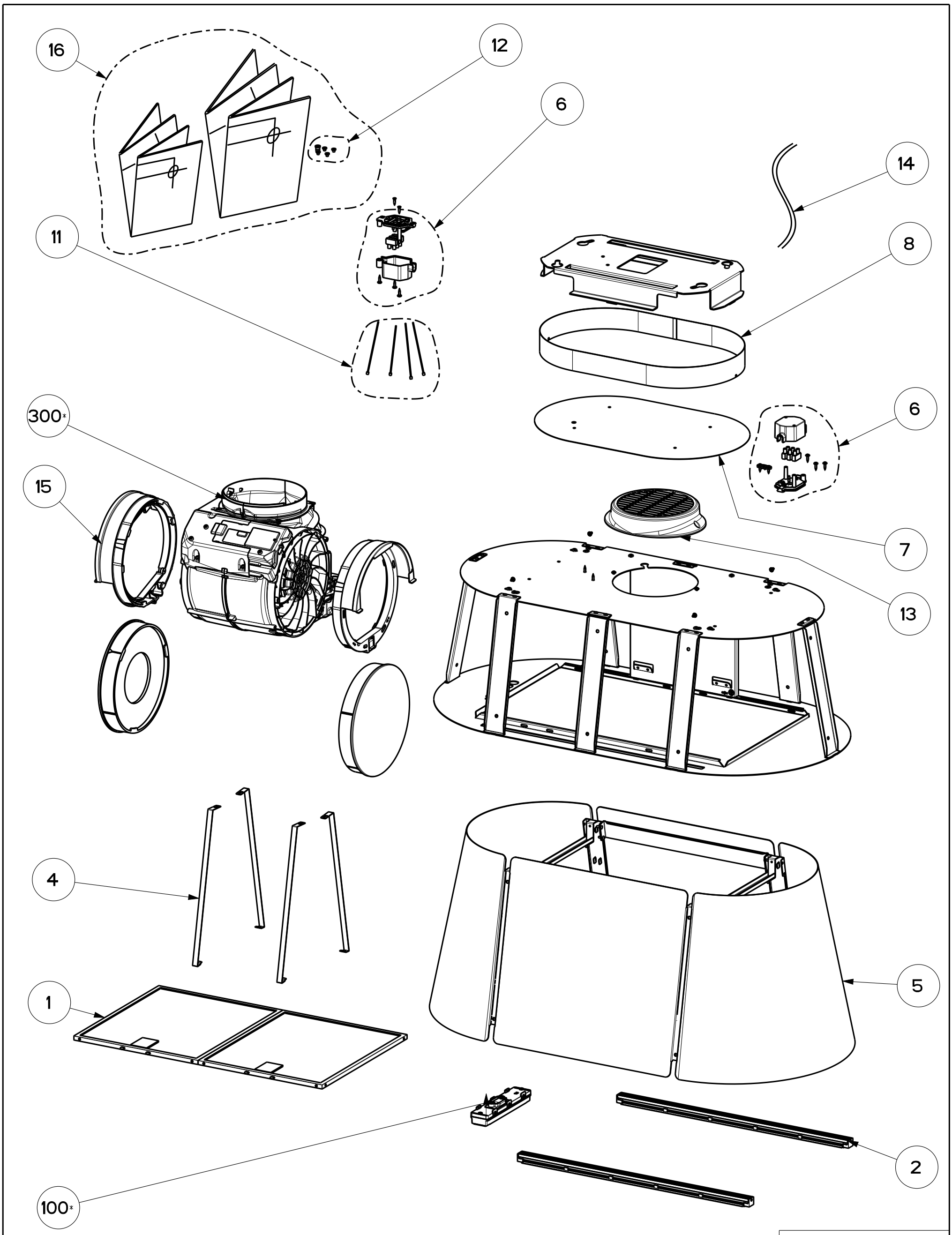

Created by **Stopponi, Fabio**	
Denomination **EXPLODED DRAWING**	
Rif.	
Modif.by	
Approved by **Palazzi, Walter**	
Approval date **02-May-2023**	
Doc. status **Released**	
Drawing N. 345022_712	Rev 01