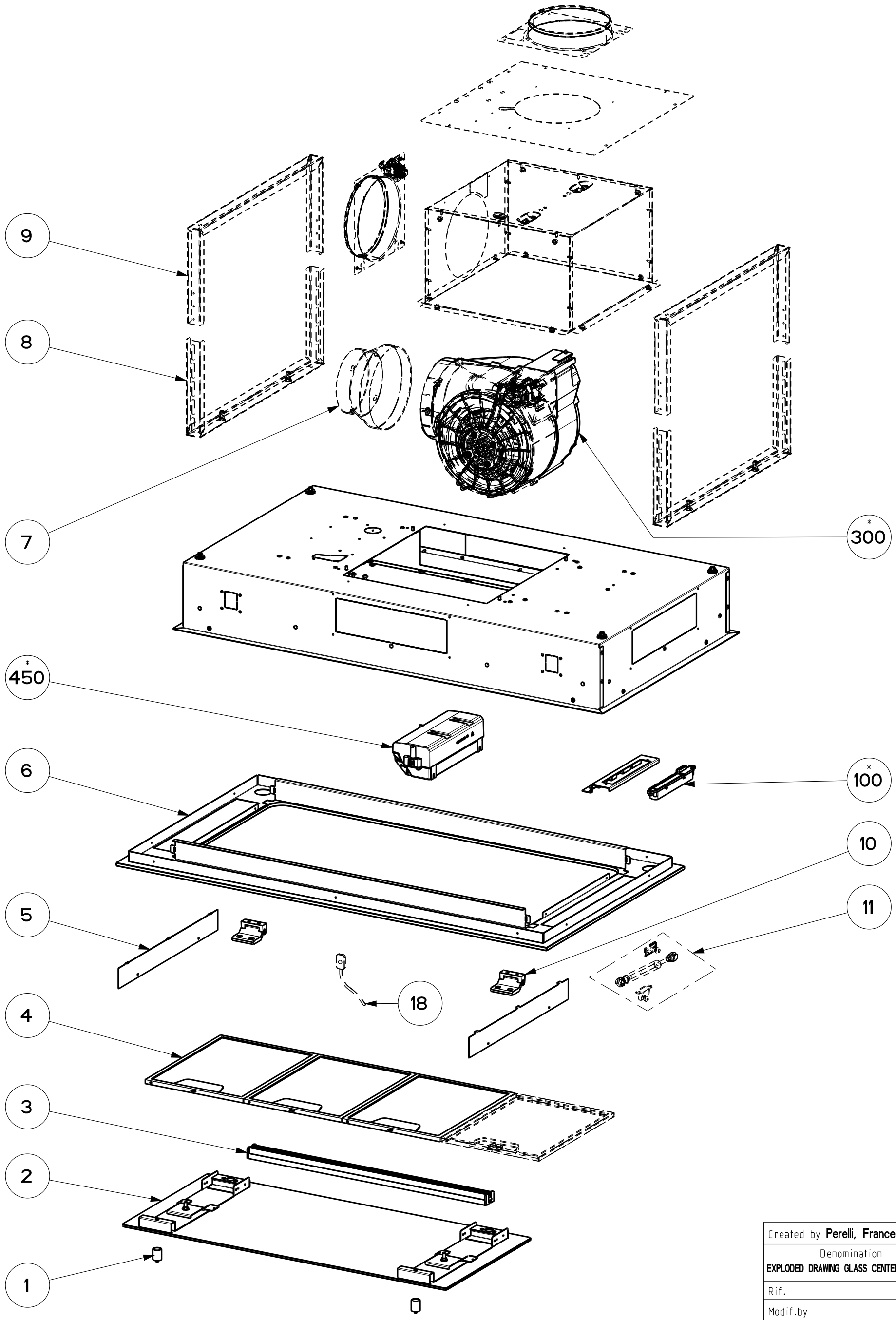

Created by	Perelli, Francesco
Denomination	EXPLODED DRAWING GLASS CENTER LED BAR
Rif.	
Modif.by	
Approved by	Bellucci, Daniele
Approval date	12-Sep-2019
Doc. status	Released
Drawing N.	59A_942
Rev	02