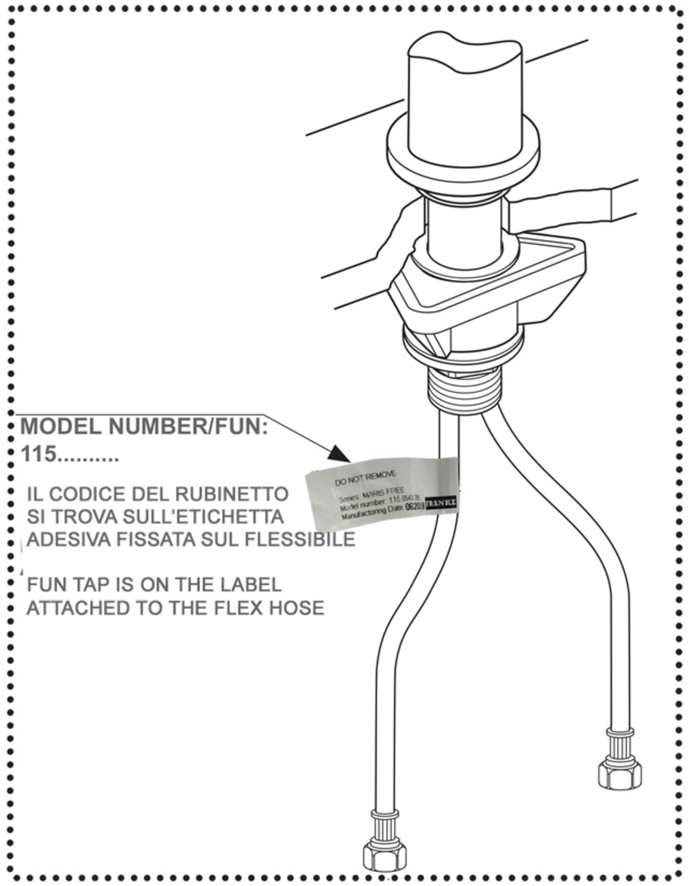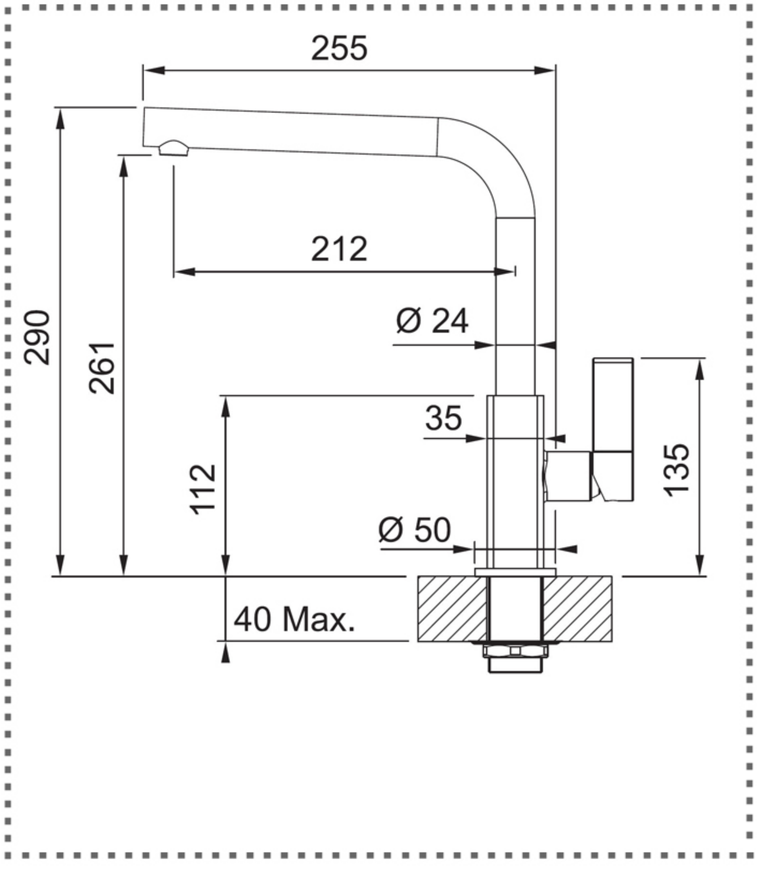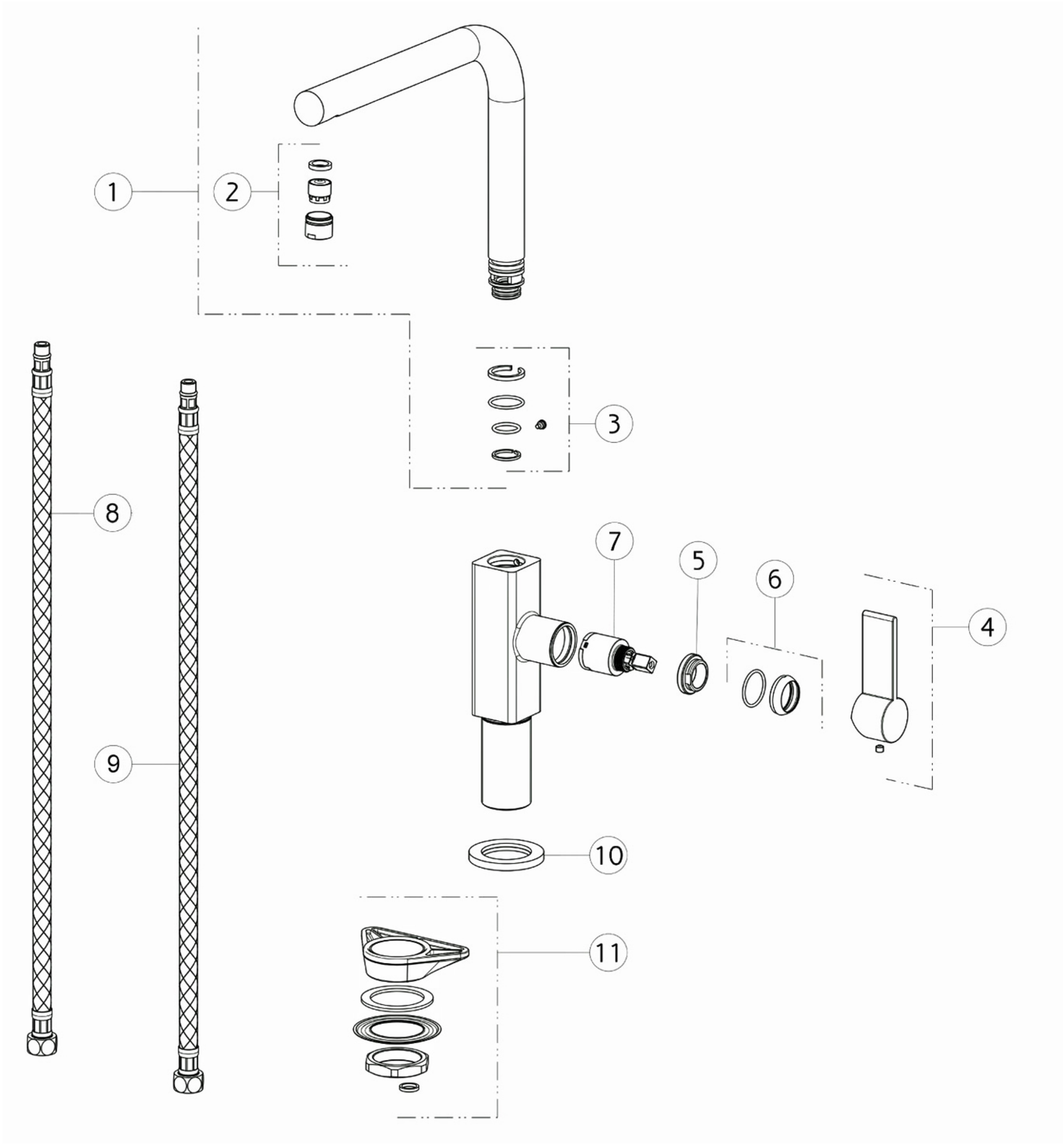MARIS CANNA GIREVOLE
MARIS WITH TUBE SPOUT