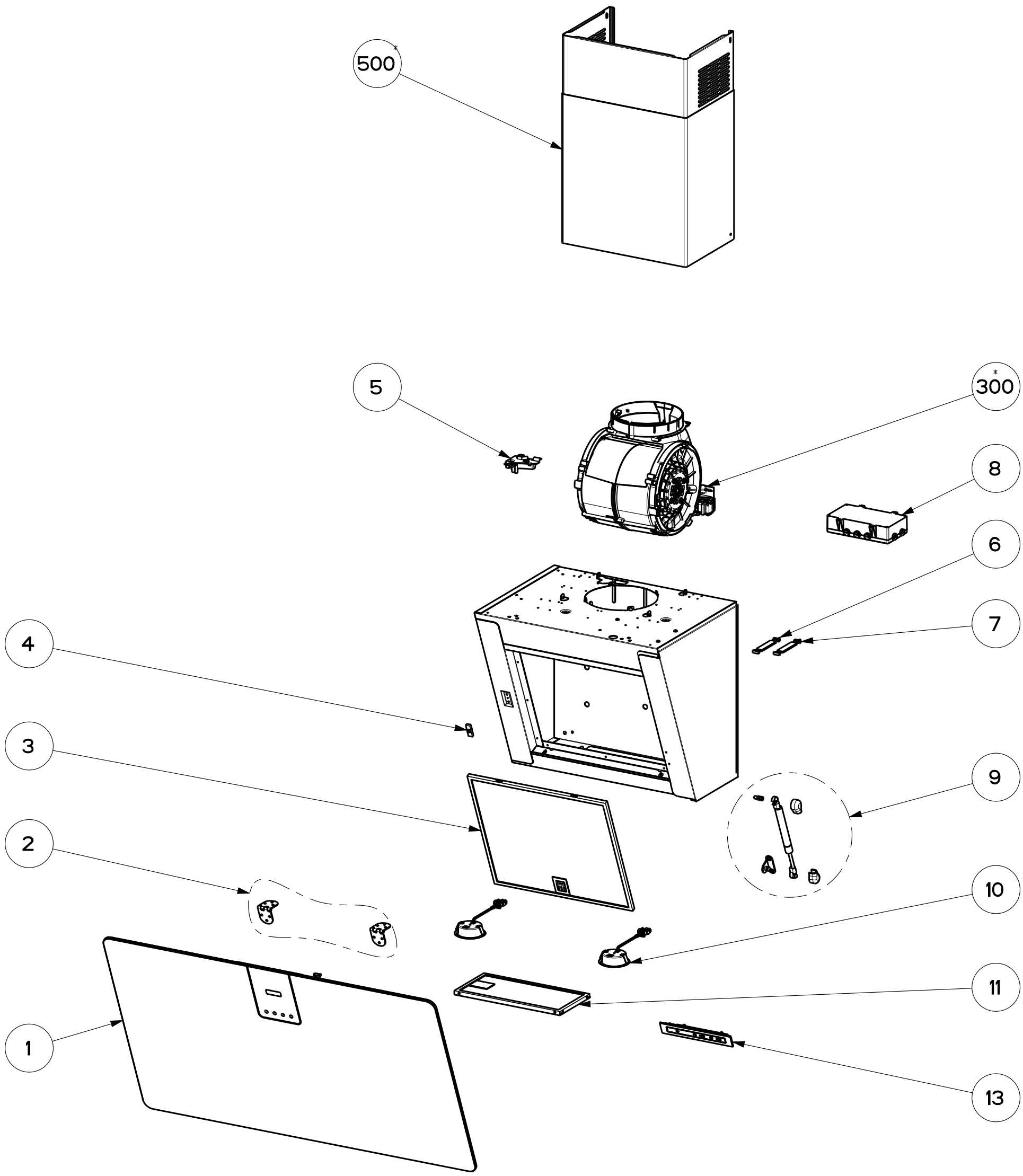

Created by **Latini, Francesco**	
Denomination **EXPLODED DRAWING FENIX**	
Rif.	
Modif.by	
Approved by **Romani, Fabio**	
Approval date **29-Jan-2020**	
Doc. status **Released**	
Drawing N. **47A_1225**	Rev **01**