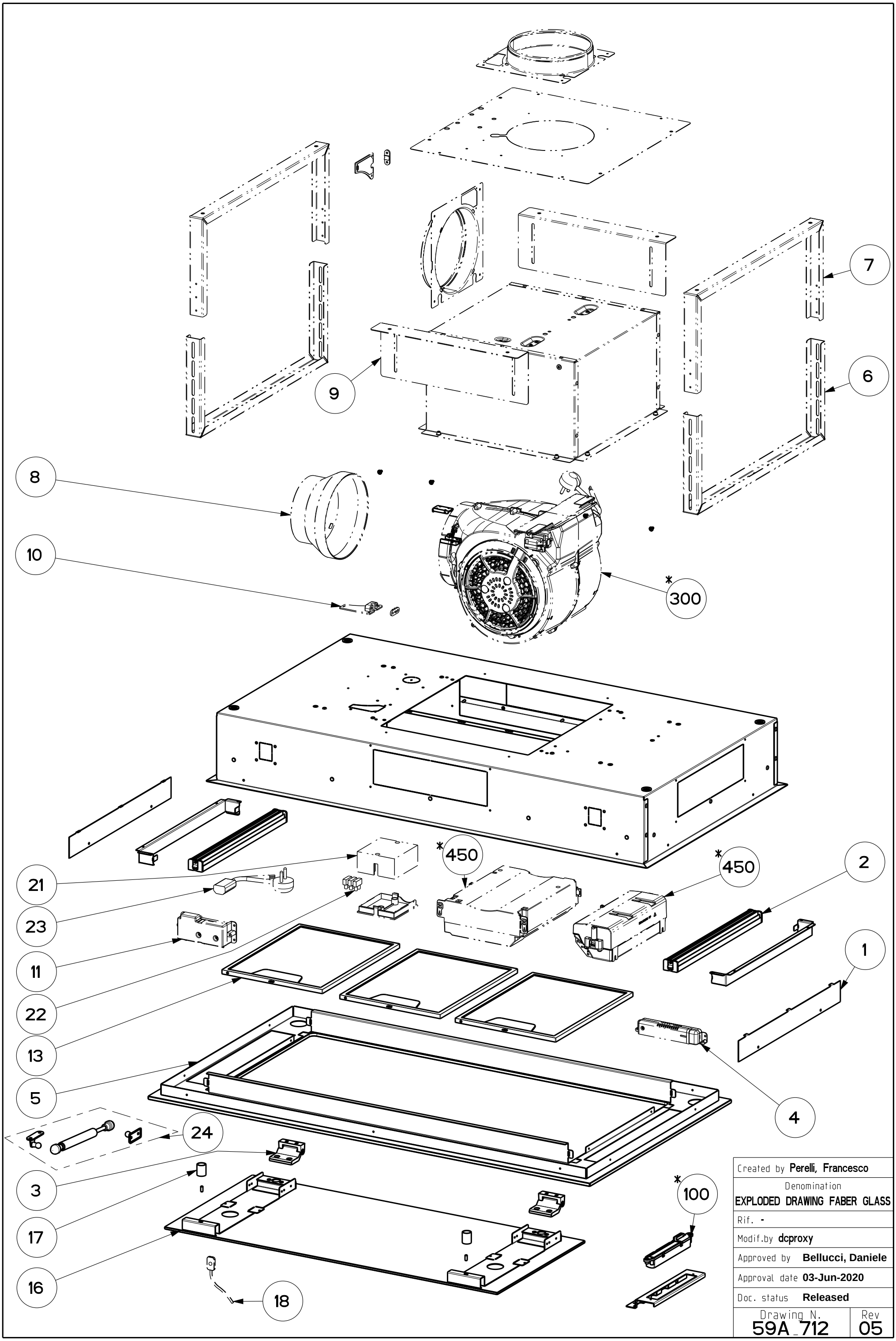

Created by Perelli, Francesco	
Denomination EXPLODED DRAWING FABER GLASS	
Rif. -	
Modif.by dcproxy	
Approved by Bellucci, Daniele	
Approval date 03-Jun-2020	
Doc. status Released	
Drawing N. 59A_712	Rev 05