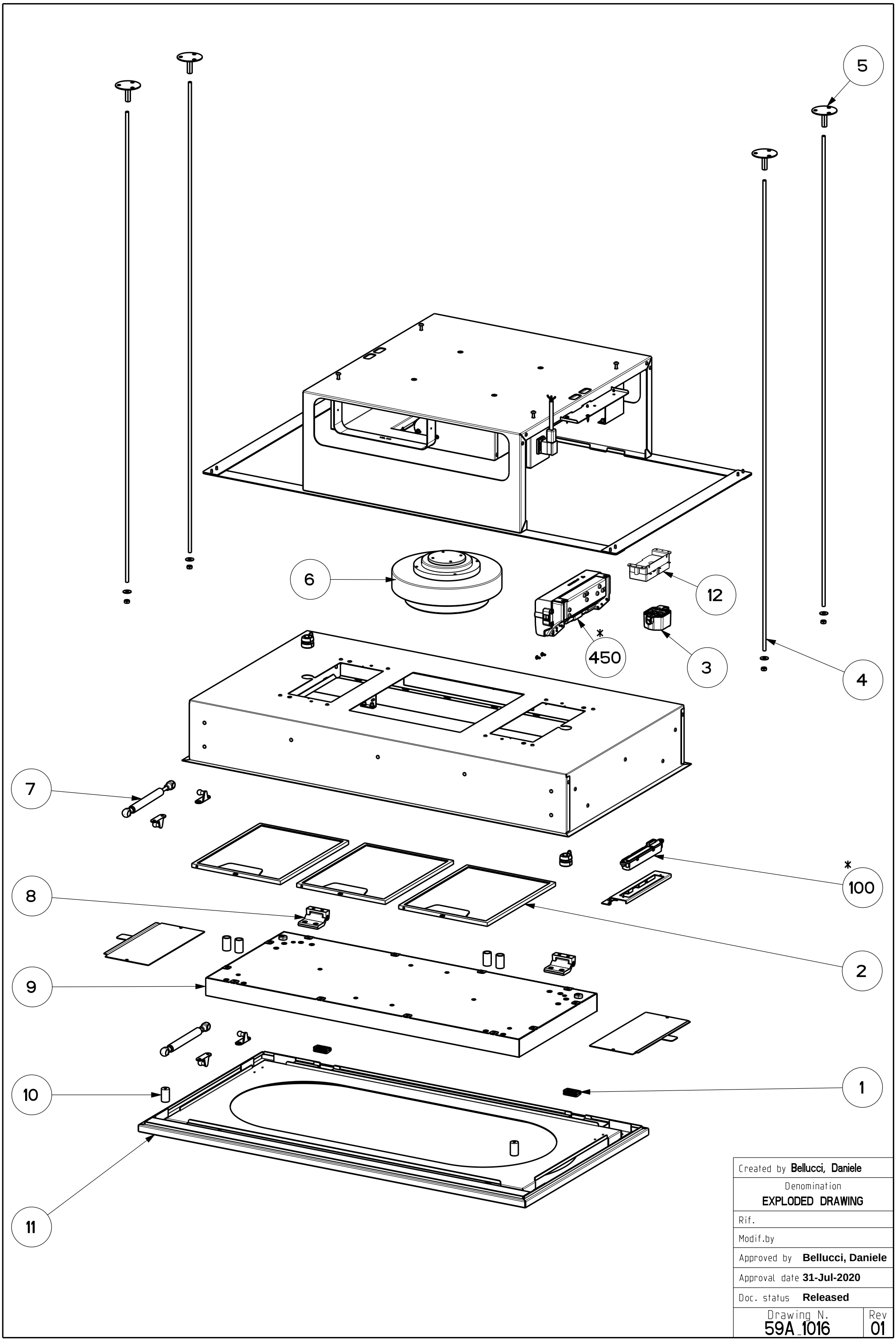

Created by **Bellucci, Daniele**	
Denomination **EXPLODED DRAWING**	
Rif.	
Modif.by	
Approved by **Bellucci, Daniele**	
Approval date **31-Jul-2020**	
Doc. status **Released**	
Drawing N. **59A_1016**	Rev **01**