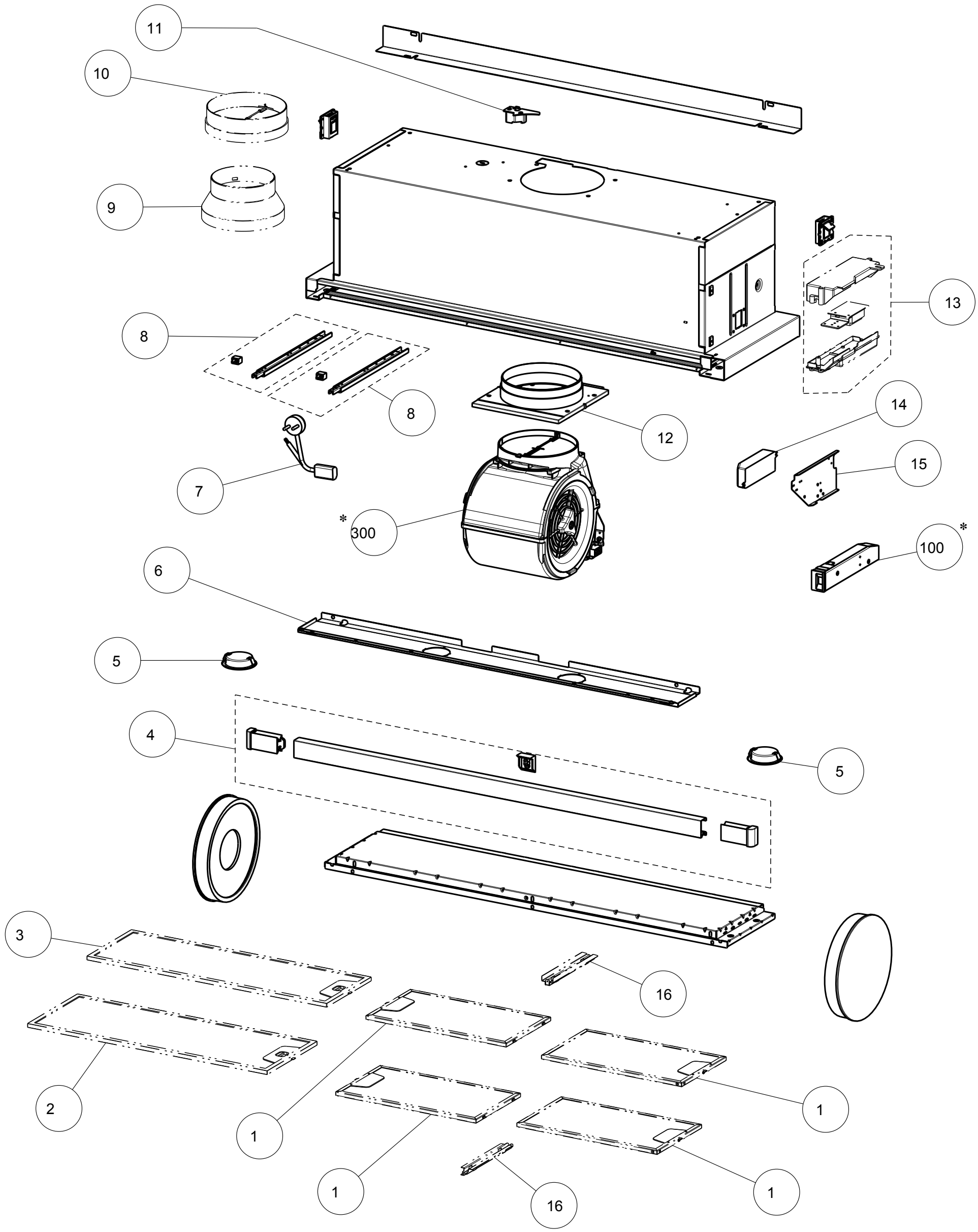

Created by tcimport	
Denomination EXPLODED DRAWING 60-90 LED	
Rif.	
Modif.by Palazzi, Walter	
Approved by	
Approval date	
Doc. status	
Drawing N. 138 724	Rev 01