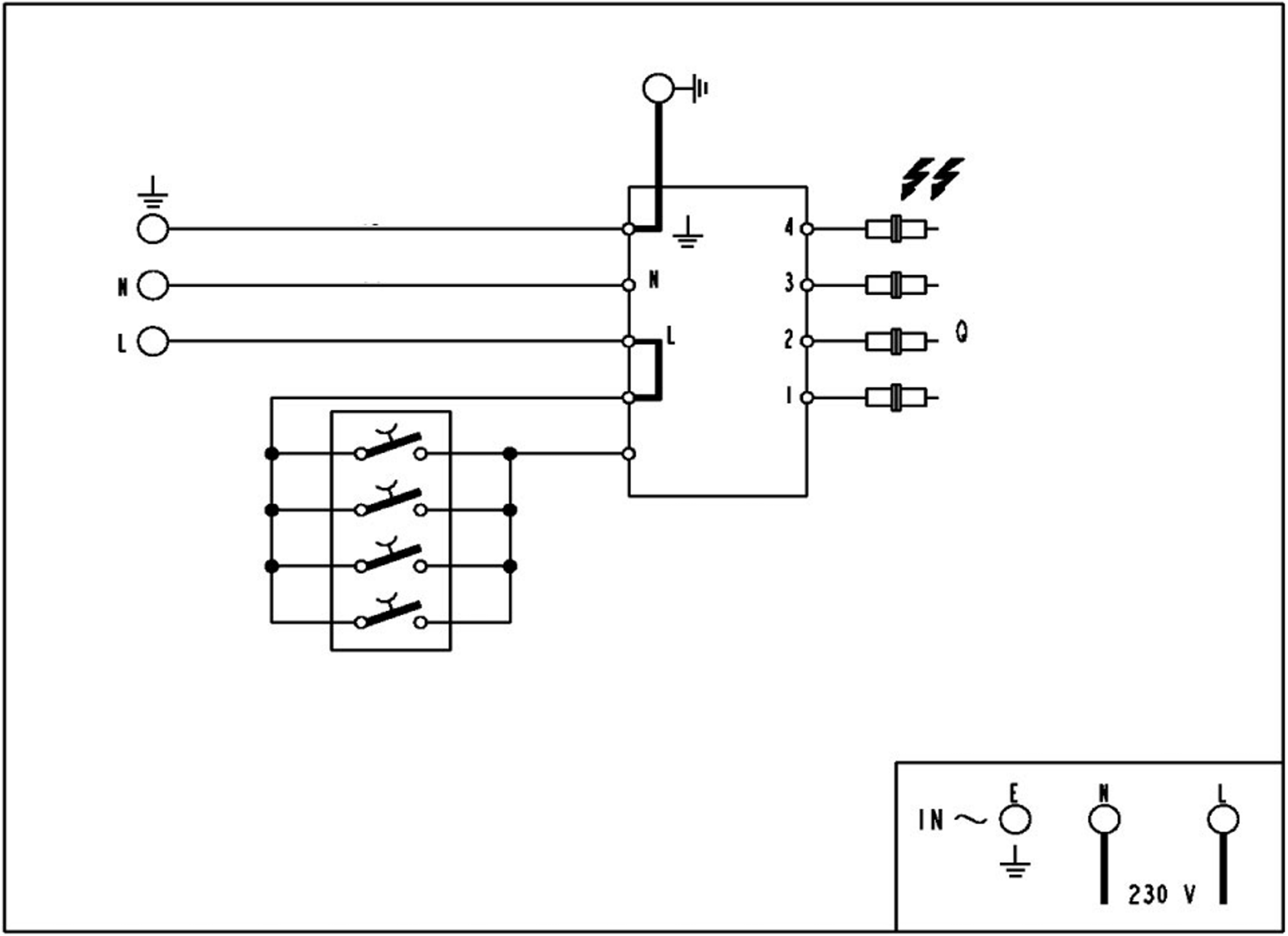
N
L
N
L
4
3
2
1
Q
IN ~
E
N
L
230 V