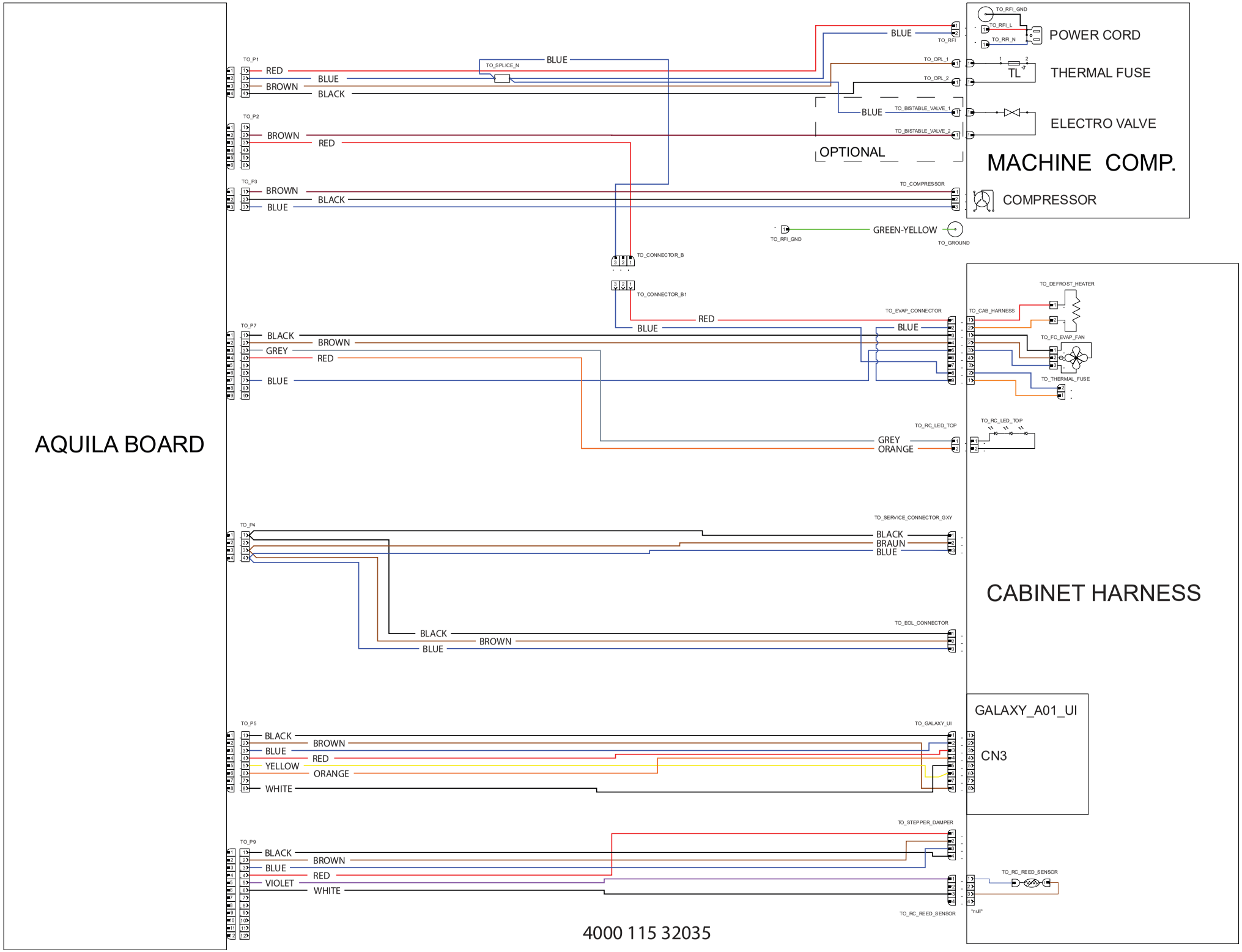
AQUILA BOARD
TO_P1
RED
BLUE
BROWN
BLACK
TO_SPLICE_N
BLUE
TO_P2
BROWN
RED
TO_P3
BROWN
BLACK
BLUE
TO_RFI
BLUE
TO_OPL_1
TO_OPL_2
TO_BISTABLE_VALVE_1
BLUE
TO_BISTABLE_VALVE_2
OPTIONAL
TO_RFI_GND
TO_RFI_L
TO_RFI_N
POWER CORD
TL
THERMAL FUSE
ELECTRO VALVE
MACHINE COMP.
TO_COMPRESSOR
COMPRESSOR
TO_RFI_GND
GREEN-YELLOW
TO_GROUND
TO_CONNECTOR_B
TO_CONNECTOR_B1
TO_P7
BLACK
BROWN
GREY
RED
BLUE
RED
BLUE
TO_EVAP_CONNECTOR
BLUE
TO_DEFROST_HEATER
TO_CAB_HARNESS
TO_FC_EVAP_FAN
TO_THERMAL_FUSE
TO_RC_LED_TOP
GREY
ORANGE
TO_RC_LED_TOP
TO_P4
TO_SERVICE_CONNECTOR_GXY
BLACK
BRAUN
BLUE
CABINET HARNESS
TO_EOL_CONNECTOR
BLACK
BROWN
BLUE
GALAXY_A01_UI
CN3
TO_P5
BLACK
BLUE
YELLOW
WHITE
BROWN
RED
ORANGE
TO_GALAXY_UI
TO_STEPPER_DAMPER
TO_P9
BLACK
BLUE
VIOLET
BROWN
RED
WHITE
TO_RC_REED_SENSOR
TO_RC_REED_SENSOR
"null"
4000 115 32035